BANEBURY

TOTAL AREA = 922 SF (CONDITIONED)

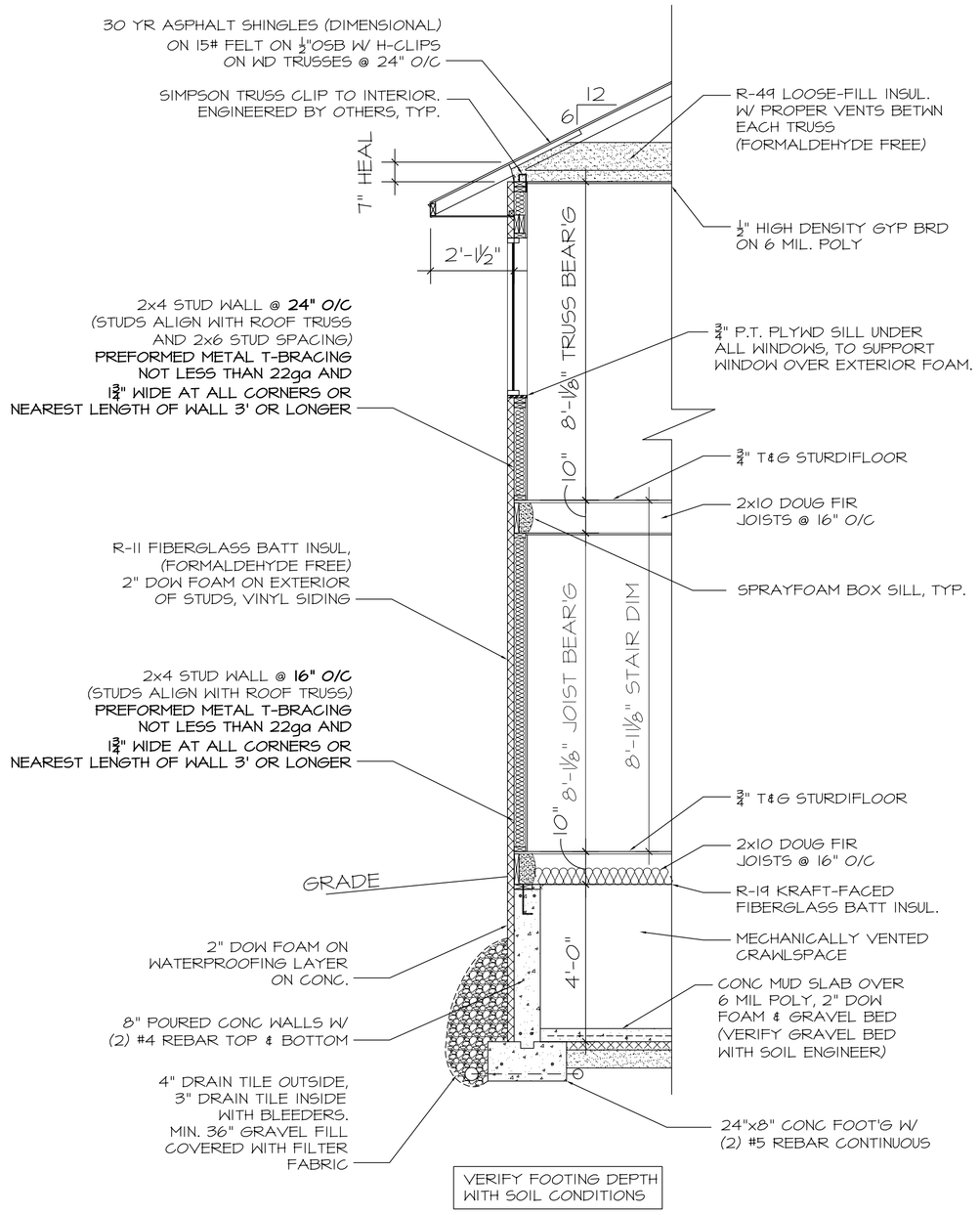

SECTION 1/A3

SCALE: 3/8"=1'-0"

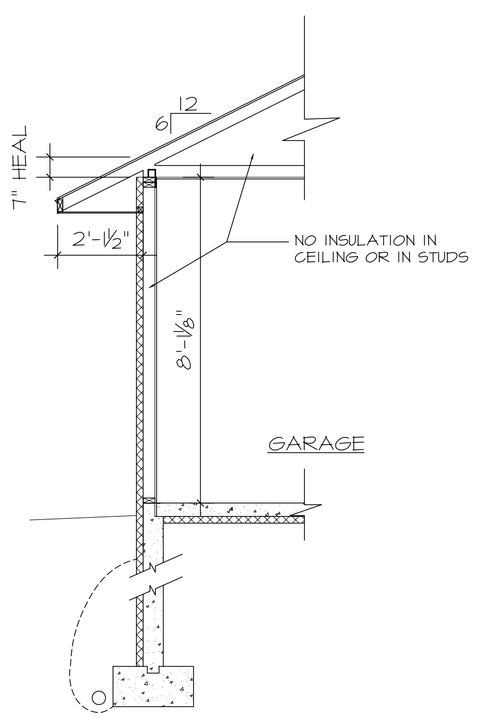

SECTION 2/A3

SCALE: 3/8"=1'-0"

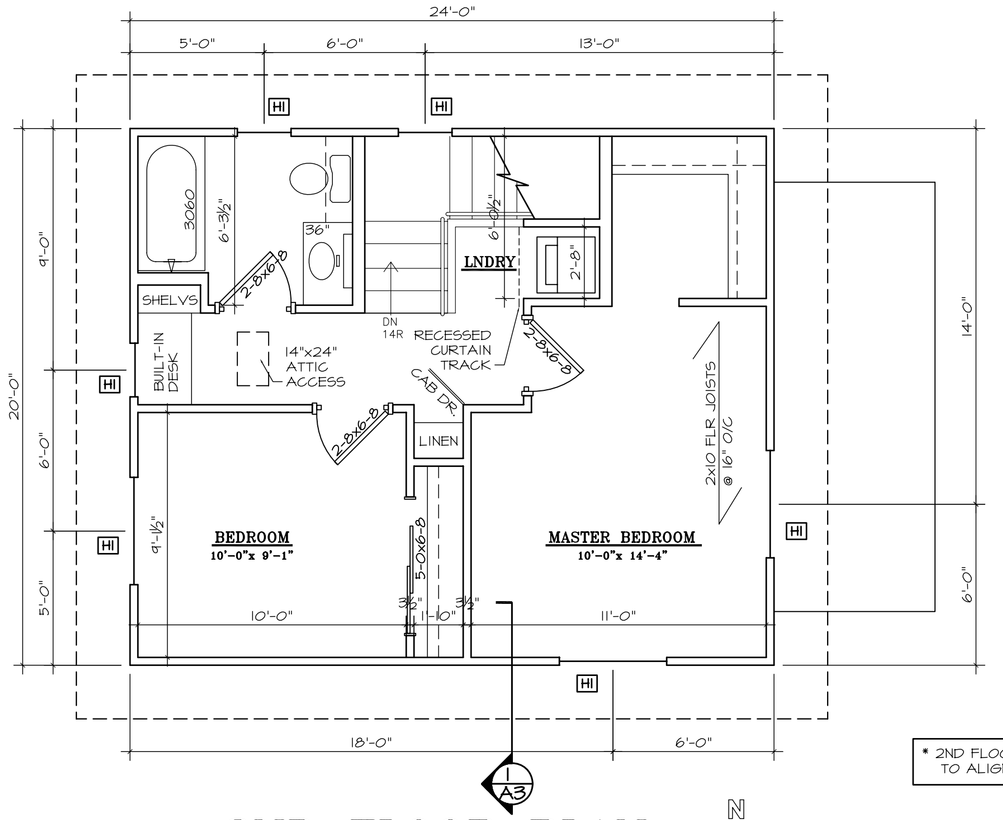

2ND FLOOR PLAN

SCALE: 1/4"=1'-0"
AREA = 442 SF

* 2ND FLOOR EXTERIOR STUDS TO ALIGN W/ ROOF TRUSSES

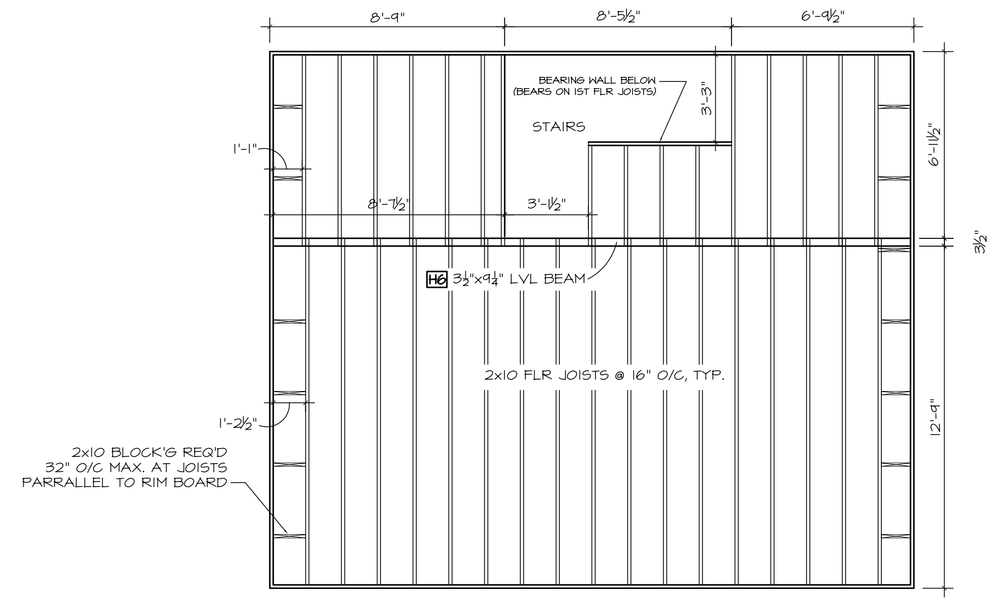

2ND FLOOR FRAMING PLAN

SCALE: 1/4"=1'-0"

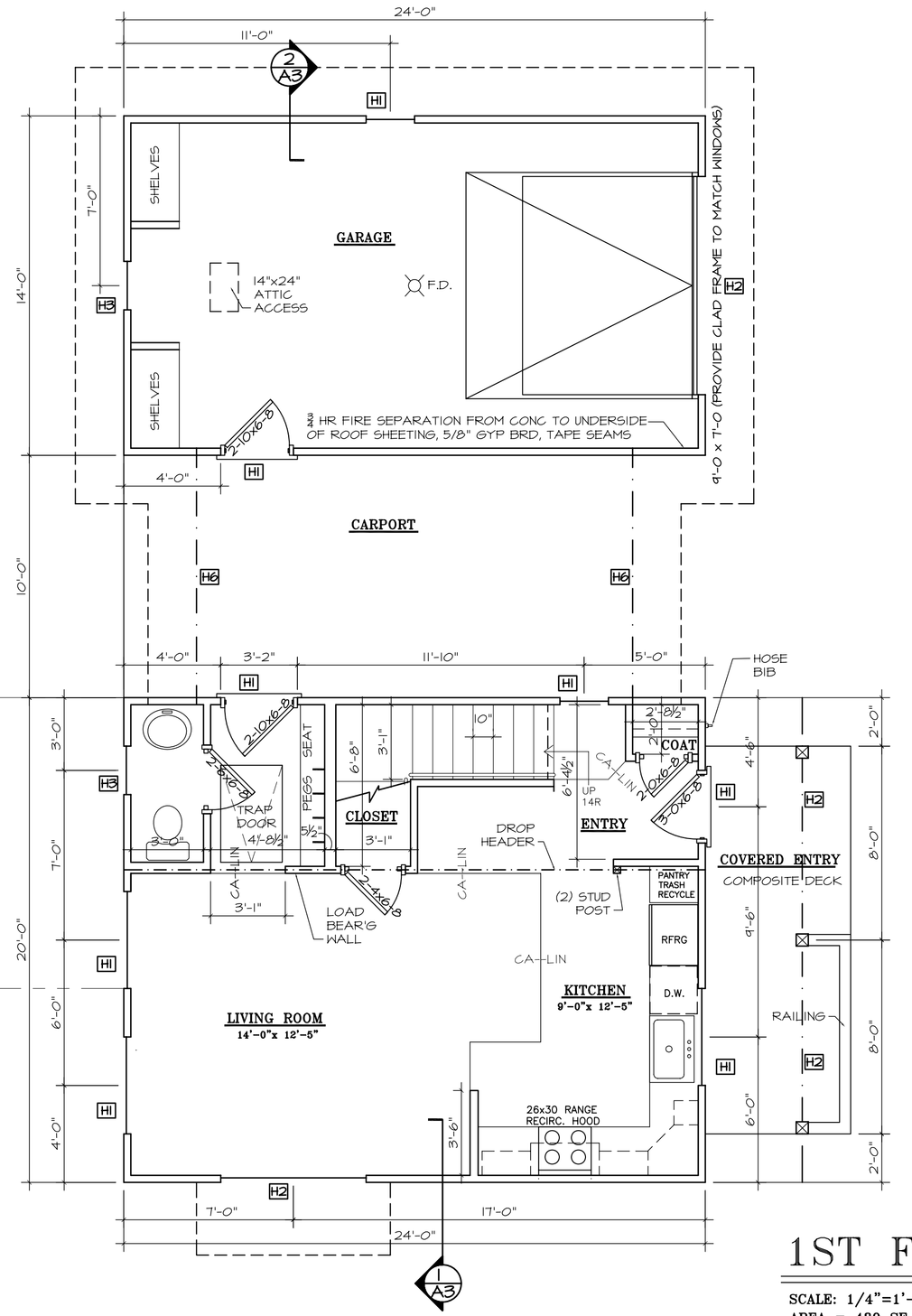

1ST FLOOR PLAN

SCALE: 1/4"=1'-0"
AREA = 480 SF

WINDOW FRAMING NOTE:

3/4" PLYWD @ WINDOW SILLS FOR WINDOW SUPPORT OVER 2" RIGID FOAM SHEETING, SEE SECTION, TYPICAL

HEADER SCHEDULE

H1	(2) 2x6 #2 BTR
H2	(2) 2x10 #2 BTR
H3	(2) 2x4 #2 BTR
H4	(2) 2x8 #2 BTR
H5	(2) 1.75x11.875 LVL
H6	(2) 1.75x9.25 LVL

NOTES

- DIMENSIONS ARE FROM FACE OF FRAMING AND FACE OF CONCRETE
- FURRING AT CONCRETE WALLS ARE 2x2 @ 24" O/C W/ 1½" DOW FOAM BETWN. FUR'S
- EXTERIOR WALLS ARE 2x4x92⅝" @ 24" O/C (ALIGN W/ ROOF TRUSSES)
  - 1ST FLOOR EXTERIOR WALLS ARE 2x4x92⅝" @ 16" O/C
  - 2ND FLOOR WALLS ARE 2x4x92⅝" @ 24" O/C (ALIGN W/ ROOF TRUSSES)
- INTERIOR WALLS ARE 2x4 @ 24" O/C
- GARAGE WALLS ARE 2x4x92⅝" @ 24" O/C (ALIGN W/ ROOF TRUSSES)
- ⅝" GYP BRD ON ALL WALLS, ½" HIGH DENSITY GYP BRD ON CEILINGS
- R-11 FIBERGLASS BATTS IN EXTERIOR WALLS
- 2" RIGED DOW FOAM ON EXTERIOR WALLS (NO WOOD SHEETING) USE METAL CROSS BRACING AT ALL CORNERS OR WALL NEAREST TO CORNER IF WINDOW IMPEADS SPACE
- R-49 LOOSE-FILL INSULATION IN ATTIC
- ENERGY STAR VINYL WINDOWS
- MECHANICAL: 90% EFFICIENCY FURNACE (ENERGY STAR LABEL RECOMMEND)

BUILD TO ENERGY STAR SPECIFICATIONS

Copyright ©Chad Michael Cornette

TDI DEVELOPMENT
JAMES F. OLSEN
130 MAIN STREET
SUITE 204
MENASHA, WI 54952
TEL: 920-722-9292

CANTILEVER
CHAD CORNETTE
215 PLEASANT PLACE
DEPERE, WI 54115
TEL: 920-339-9061
EM: CANTILEVER@USA.COM

NATURE'S WAY

PROTOTYPE RESIDENCES FOR
NATURES WAY
CITY OF MENASHA

PROJECT NO.
R-NAT-06
DATE:
24 OCT 2006

SHEET
A3