FESTIVAL FOODS: OVERALL SITE PLAN

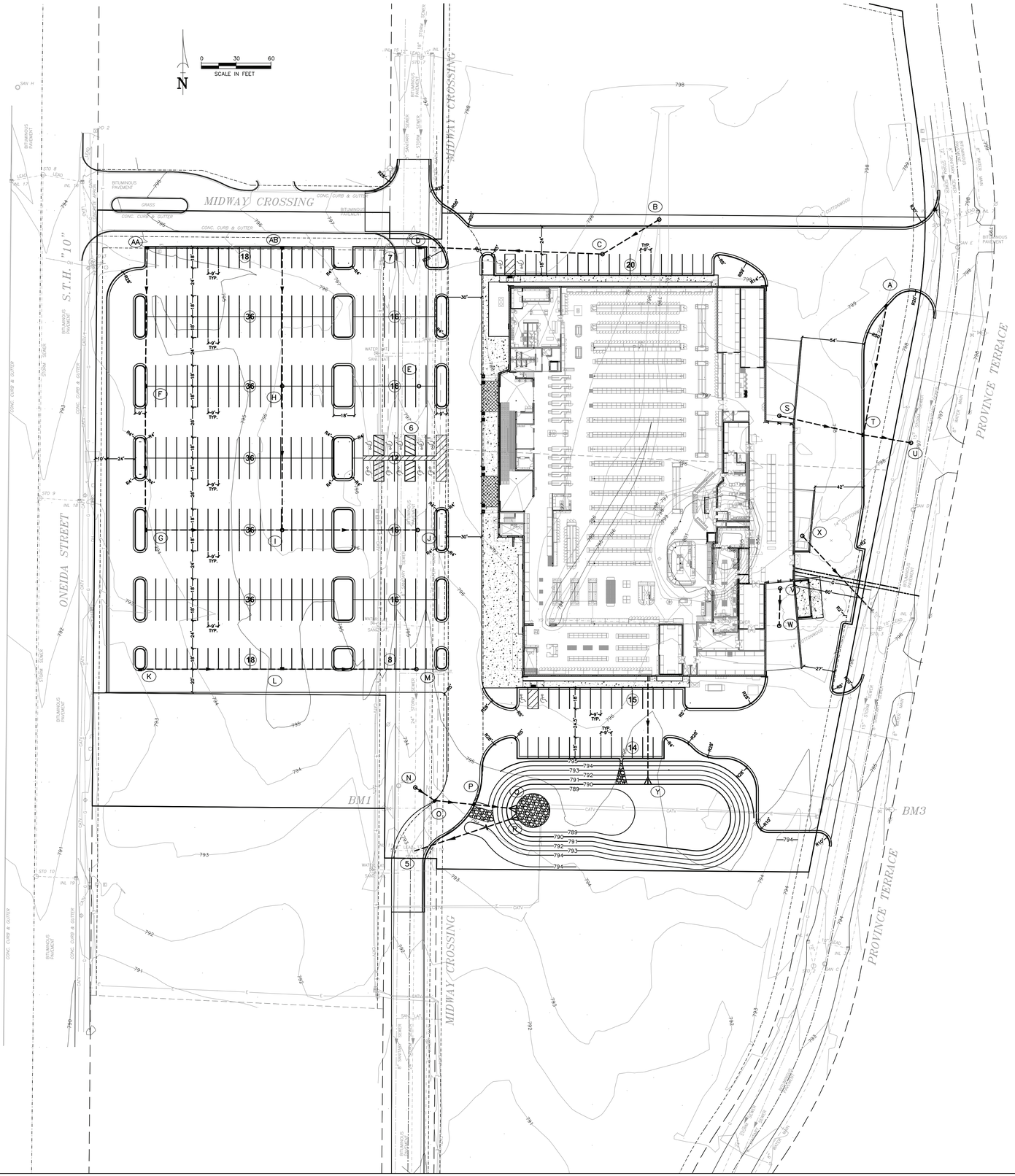

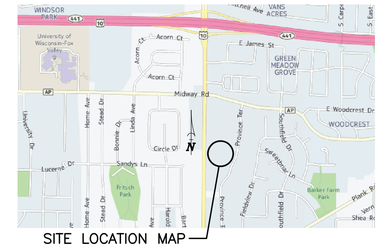

SITE LOCATION MAP

INDEX OF SHEETS	
DRAWING NO.	DESCRIPTION:
C101	SITE PLAN
C102	SITE PLAN KEY NOTES
C103	DEMOLITION PLAN
C201	UTILITY LAYOUT PLAN
C301	DRAINAGE PLAN
C401	EROSION CONTROL PLAN
C402	EROSION CONTROL DETAILS
C501	POND PLAN
C601	STANDARD DETAILS
C602	STANDARD DETAILS
C603	STANDARD DETAILS
C701	LANDSCAPE PLAN
C801	SITE LIGHTING PLAN

PERTINENT CONTACTS	CONTACT PERSON	PHONE
MARTENSON & EISELE	MICHAEL S. SIEWERT	WORK (920) 731-0381 CELL (920) 427-2359
MARTENSON & EISELE	GARY ZAHRINGER	920-731-0381
MARTENSON & EISELE	CHRIS CLEARY	920-731-0381

JOB SITE LOCATION
FESTIVAL FOODS – ONEIDA STREET
MENASHA, WISCONSIN
TAX KEYS: #7-00052-13
#7-00052-14
#7-00052-15

LEGAL DESCRIPTION
ALL OF LOTS 1 & 2 OF CERTIFIED SURVEY MAP NO. ####, LOCATED IN THE WEST 1/2 OF THE NORTHWEST 1/4, SECTION 7, TOWNSHIP 20 NORTH, RANGE 18 EAST, CITY OF MENASHA, WINNEBAGO COUNTY, WISCONSIN

ZONING DISTRICT
C-1 GENERAL COMMERCIAL

FIRE PROTECTION
FIRE SPRINKLING SYSTEM

PARKING
REQUIREMENTS
SUPERMARKETS: 1 SPACE PER 400 S.F. OF PUBLIC FLOOR AREA

50,900 S.F. / 400 = 127 SPACES

357 TOTAL SPACES

ACCESSIBLE SPACES
9 HANDICAP SPACE REQUIRED
14 HANDICAP SPACES ADDED

TOTAL PARKING AREA: 2.83 AC
LANDSCAPE ISLAND AREA: 0.284 AC (10.04%)

SITE DATA
SITE AREA: 364,432 SF (8.37 AC)
(LOTS 1 & 2, CSM NO. ####)

EXISTING CONDITIONS
EXISTING ROOF TOP AREA: 0,000 SF (0.00 AC)
EXISTING PAVEMENT AREA: 18,002 SF (0.41 AC)
EXISTING OPEN SPACE: 346,430 SF (7.95 AC)
EXISTING IMPERVIOUS PERCENTAGE: 4.98%

PROPOSED CONDITIONS
PROPOSED ROOF TOP AREA: 77,745 SF (1.78 AC)
PROPOSED PAVEMENT AREA: 185,175 SF (4.25 AC)
PROPOSED OPEN SPACE: 101,512 SF (2.33 AC)
PROPOSED IMPERVIOUS PERCENTAGE: 72.16%

OWNER
FESTIVAL FOODS
ATTN: AARON ASPENSON
237 SECOND AVENUE SOUTH
ONALASKA, WI 54650
(608) 779-2708 (DIRECT)
(608) 783-6065 (FAX)

ARCHITECT
SOMERVILLE, INC.
ATTN: JOHN R. OATES
2100 RIVERSIDE DRIVE
GREEN BAY, WI 54301-2390
(920) 593-3829 (DIRECT)
(920) 680-8621 (CELL)
(920) 437-1131 (FAX)

ENGINEER:
MARTENSON & EISELE, INC.
ATTN: MICHAEL S. SIEWERT, P.E.
1377 MIDWAY ROAD
MENASHA, WI 54952
mikes@martenson-eisele.com
PHONE: 920-731-0381

SITE PLAN NOTES	
1.	ALL WORK AND MATERIALS SHALL COMPLY WITH ALL CITY OF MENASHA LAND, O.S.H.A. STANDARDS AND CODES.
2.	CONTRACTOR SHALL REFER TO THE ARCHITECTURAL PLANS FOR EXACT LOCATIONS AND DIMENSIONS OF VESTIBULES, SLOPE PAVING, SIDEWALKS, EXIT PORCHES, TRUCK DOCKS, PRECISE BUILDING DIMENSIONS AND EXACT BUILDING UTILITY ENTRANCE LOCATIONS.
3.	ALL DISTURBED AREAS ARE TO RECEIVE FOUR INCHES OF TOPSOIL, SEED, MULCH AND WATER UNTIL A HEALTHY STAND OF GRASS IS ESTABLISHED.
4.	ALL DIMENSIONS AND RADII ARE TO THE FACE OF CURB UNLESS OTHERWISE NOTED.
5.	EXISTING STRUCTURES WITHIN CONSTRUCTION LIMITS ARE TO BE ABANDONED, REMOVED OR RELOCATED AS NECESSARY. ALL COST SHALL BE INCLUDED IN BASE BID.
6.	CONTRACTOR SHALL BE RESPONSIBLE FOR ALL RELOCATIONS, INCLUDING BUT NOT LIMITED TO, ALL UTILITIES, STORM DRAINAGE, SIGNS, TRAFFIC SIGNALS & POLES, ETC. AS REQUIRED. ALL WORK SHALL BE IN ACCORDANCE WITH THE CITY OF MENASHA'S SPECIFICATIONS AND SHALL BE APPROVED BY SUCH. ALL COST SHALL BE INCLUDED IN BASE BID.
7.	9. THE CONTRACTOR AND/OR OWNER SHALL NOT PROCEED WITH LAND DISTURBING ACTIVITIES PRIOR TO RECEIVING WRITTEN NOTICE TO PROCEED FROM THE ENGINEER, TO OBTAIN APPROVAL AND ARRANGE FOR INSPECTIONS.
8.	NO HAZARDOUS MATERIALS WILL BE STORED ON SITE.
9.	STOP SIGNS SHALL BE INSTALLED AND MAINTAINED IN ACCORDANCE WITH THE FEDERAL HIGHWAY ADMINISTRATION MANUAL OF UNIFORM TRAFFIC CONTROL DEVICES, LATEST VERSION.

TOPOGRAPHIC LEGEND		
1" x 18" IRON PIPE SET	OVERHEAD POWER LINES	GAS VALVE
1-1/4" x 30" REBAR SET	UNDERGROUND ELECTRIC	EXIST. STORM MANHOLE
CHISELED "X" SET	UNDERGROUND TELEPHONE	STORM INLET
3/4" REBAR FOUND	UNDERGROUND FIBEROPTIC	YARD DRAIN
1" IRON PIPE FOUND	UNDERGROUND GAS	EXIST. SANITARY MANHOLE
1-1/4" REBAR FOUND	UNDERGROUND CABLE TV	EXIST. SAN. SEWER
2" IRON PIPE FOUND	EXIST. FENCE LINE	EXIST. STG. SEWER
CHISELED "X" FOUND	SIGN	EXIST. WATER MAIN
GOVERNMENT CORNER	POWER POLE	EXIST. SPOT ELEVATION
RECORDED AS	GUY	
CONIFEROUS TREE	LIGHT POLE	CONTOUR W/ ELEVATION
DECIDUOUS TREE	TELEPHONE PEDESTAL	EXIST. TOP OF CURB ELEV.
EXIST. WOODS LINE	ELECTRIC PEDESTAL	EXIST. FLOW LINE ELEV.
WETLANDS	CABLE PEDESTAL	FIRST FLOOR = 000.00
SOIL BORING	EXIST. HYDRANT	TOPSOIL DEPTH
	WATER VALVE	INFILTRATION SOIL BORING
	WATER STOP BOX	

WISCONSIN MICHAEL S. SIEWERT E-27134 HORSHAWLEY WI PROFESSIONAL ENGINEER
10/15/2015

design matters

somerville
architects | engineers
Somerville Inc. | 2100 Riverside Drive, Green Bay, WI 54301-2390
P 920.437.8136 | F 920.437.1131 | www.somervilleinc.com

MEYER | BORGMAN | JOHNSON
STRUCTURAL DESIGN • ENGINEERING
SEE STRUCTURE

Martenson & Eisele, Inc.
Civil Engineering
Environmental
Surveying
Architecture
1377 Midway Road
Menasha, WI 54952
www.martenson-eisele.com
info@martenson-eisele.com
920.731.0381 | 800.236.0381

Revisions	Description	Date
R1	Parking islands & sidewalk	10-5-2015
R2	Building footprint & sidewalk	10-9-2015
R3	Building outline and back decks revised	10-15-2015

No plans may not be reproduced nor altered in other manner without permission of Somerville, Inc.
Ownership of plans of this drawing may be subject to ©2025 Somerville, Inc.
Permsupervisor@somerville.com

OVERALL SITE PLAN

NEW STORE FOR:
SKOGEN'S FESTIVAL FOODS
MENASHA, WISCONSIN

Date:
10/15/2015
Project No.
6630
Sheet
C101

FESTIVAL FOODS: SITE PLAN KEY NOTES

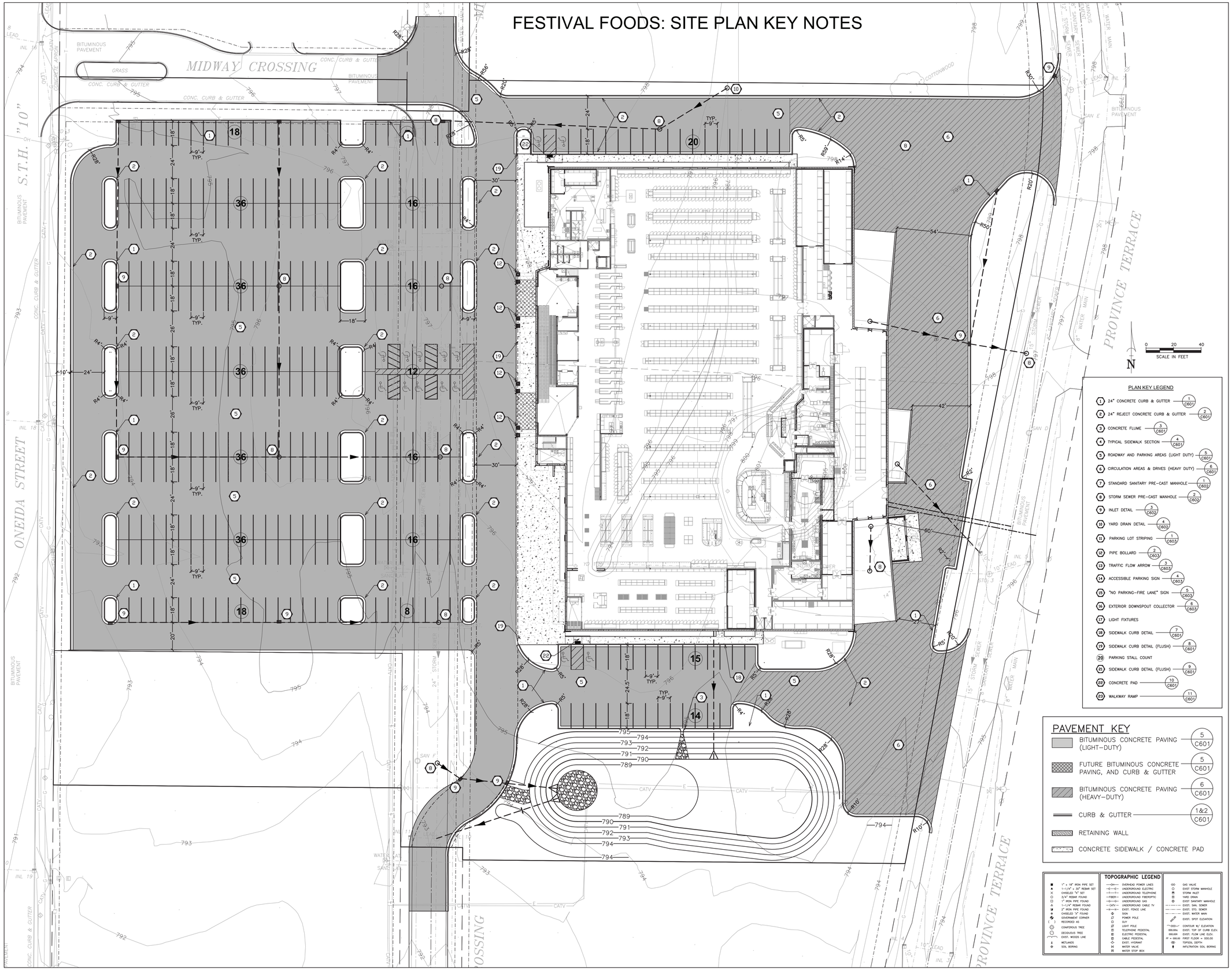

PLAN KEY LEGEND

1. 24" CONCRETE CURB & GUTTER — 1/C601
2. 24" REJECT CONCRETE CURB & GUTTER — 2/C601
3. CONCRETE FLUME — 3/C601
4. TYPICAL SIDEWALK SECTION — 4/C601
5. ROADWAY AND PARKING AREAS (LIGHT DUTY) — 5/C601
6. CIRCULATION AREAS & DRIVES (HEAVY DUTY) — 6/C601
7. STANDARD SANITARY PRE-CAST MANHOLE — 1/C602
8. STORM SEWER PRE-CAST MANHOLE — 2/C602
9. INLET DETAIL — 3/C602
10. YARD DRAIN DETAIL — 4/C602
11. PARKING LOT STRIPING — 1/C603
12. PIPE BOLLARD — 2/C603
13. TRAFFIC FLOW ARROW — 3/C603
14. ACCESSIBLE PARKING SIGN — 4/C603
15. "NO PARKING-FIRE LANE" SIGN — 5/C603
16. EXTERIOR DOWNSPOUT COLLECTOR — 6/C603
17. LIGHT FIXTURES
18. SIDEWALK CURB DETAIL — 7/C601
19. SIDEWALK CURB DETAIL (FLUSH) — 8/C601
20. PARKING STALL COUNT
21. SIDEWALK CURB DETAIL (FLUSH) — 9/C601
22. CONCRETE PAD — 10/C601
23. WALKWAY RAMP — 11/C601

PAVEMENT KEY

- BITUMINOUS CONCRETE PAVING (LIGHT-DUTY) — 5/C601
- FUTURE BITUMINOUS CONCRETE PAVING, AND CURB & GUTTER — 5/C601
- BITUMINOUS CONCRETE PAVING (HEAVY-DUTY) — 6/C601
- CURB & GUTTER — 1&2/C601
- RETAINING WALL
- CONCRETE SIDEWALK / CONCRETE PAD

TOPOGRAPHIC LEGEND

- 1" x 18" IRON PIPE SET
- 1-1/4" x 30" REBAR SET
- CHISELED "X" SET
- 3/4" REBAR FOUND
- 1" IRON PIPE FOUND
- 1-1/4" REBAR FOUND
- 2" IRON PIPE FOUND
- CHISELED "+" FOUND
- GOVERNMENT CORNER
- RECORDED AS
- CONFEROUS TREE
- DECIDUOUS TREE
- EXIST. WOODS LINE
- WETLANDS
- SOIL BORING
- OVERHEAD POWER LINES
- UNDERGROUND ELECTRIC
- UNDERGROUND TELEPHONE
- UNDERGROUND FIBEROPTIC
- UNDERGROUND GAS
- UNDERGROUND CABLE TV
- EXIST. FENCE LINE
- SIGN
- POWER POLE
- GUY
- LIGHT POLE
- TELEPHONE PEDESTAL
- ELECTRIC PEDESTAL
- CABLE PEDESTAL
- EXIST. HYDRANT
- WATER VALVE
- WATER STOP BOX
- GAS VALVE
- EXIST. STORM MANHOLE
- STORM INLET
- YARD DRAIN
- EXIST. SANITARY MANHOLE
- EXIST. SAN. SEWER
- EXIST. STO. SEWER
- EXIST. WATER MAIN
- EXIST. SPOT ELEVATION
- CONTOUR W/ ELEVATION
- EXIST. TOP OF CURB ELEV.
- EXIST. FLOW LINE ELEV.
- FIRST FLOOR = 000.00
- TOPSOIL DEPTH
- INFILTRATION SOIL BORING

design matters

somerville
architects | engineers
Somerville Inc. | 2100 Riverside Drive, Green Bay, WI 54301-2395
P 920.437.8136 | F 920.437.1131 | www.somervilleinc.com

MEYER | BORGMAN | JOHNSON
STRUCTURAL DESIGN + ENGINEERING
SEE STRUCTURE.

Martenson & Eisele, Inc.
Planning
Environmental
Surveying
Engineering
Architecture
11711 W. Hampton Ave.
Menomonee Falls, WI 53051
www.martenson-eisele.com
info@martenson-eisele.com
920.751.0581 | 800.236.0381

Revisions	Description	Date
R2	New pavmt, curb, utility locations	10-15-2015

This drawing may not be reproduced, distributed, or used without the written permission of Somerville, Inc.
Ownership of all rights of this drawing are subjected by 17USC
Permission@somervilleinc.com
©Somerville, Inc.

SITE PLAN KEY NOTES

NEW STORE FOR:
SKOGEN'S FESTIVAL FOODS
MENASHA, WISCONSIN

Date: 10/15/15
Project No. 6630
Sheet C102

FESTIVAL FOODS: DEMOLITION PLAN

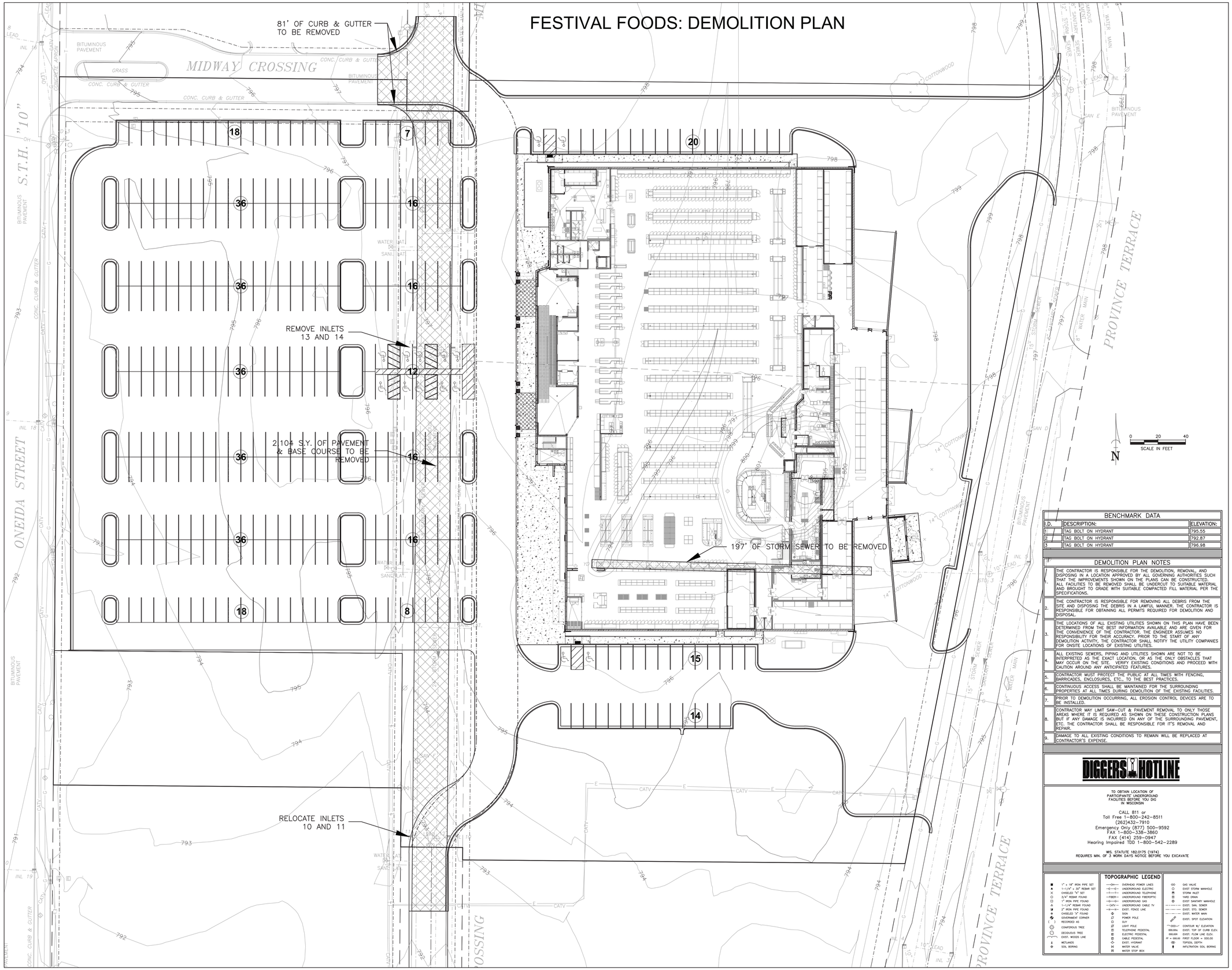

BENCHMARK DATA		
I.D.	DESCRIPTION:	ELEVATION:
1	TAG BOLT ON HYDRANT	795.55
2	TAG BOLT ON HYDRANT	792.87
3	TAG BOLT ON HYDRANT	796.98

DEMOLITION PLAN NOTES

1. THE CONTRACTOR IS RESPONSIBLE FOR THE DEMOLITION, REMOVAL, AND DISPOSING IN A LOCATION APPROVED BY ALL GOVERNING AUTHORITIES SUCH THAT THE IMPROVEMENTS SHOWN ON THE PLANS CAN BE CONSTRUCTED. ALL FACILITIES TO BE REMOVED SHALL BE UNDERCUT TO SUITABLE MATERIAL AND BROUGHT TO GRADE WITH SUITABLE COMPACTED FILL MATERIAL PER THE SPECIFICATIONS.
2. THE CONTRACTOR IS RESPONSIBLE FOR REMOVING ALL DEBRIS FROM THE SITE AND DISPOSING THE DEBRIS IN A LAWFUL MANNER. THE CONTRACTOR IS RESPONSIBLE FOR OBTAINING ALL PERMITS REQUIRED FOR DEMOLITION AND DISPOSAL.
3. THE LOCATIONS OF ALL EXISTING UTILITIES SHOWN ON THIS PLAN HAVE BEEN DETERMINED FROM THE BEST INFORMATION AVAILABLE AND ARE GIVEN FOR THE CONVENIENCE OF THE CONTRACTOR. THE ENGINEER ASSUMES NO RESPONSIBILITY FOR THEIR ACCURACY. PRIOR TO THE START OF ANY DEMOLITION ACTIVITY, THE CONTRACTOR SHALL NOTIFY THE UTILITY COMPANIES FOR ONSITE LOCATIONS OF EXISTING UTILITIES.
4. ALL EXISTING SEWERS, PIPING AND UTILITIES SHOWN ARE NOT TO BE INTERPRETED AS THE EXACT LOCATION, OR AS THE ONLY OBSTACLES THAT MAY OCCUR ON THE SITE. VERIFY EXISTING CONDITIONS AND PROCEED WITH CAUTION AROUND ANY ANTICIPATED FEATURES.
5. CONTRACTOR MUST PROTECT THE PUBLIC AT ALL TIMES WITH FENCING, BARRICADES, ENCLOSURES, ETC., TO THE BEST PRACTICES.
6. CONTINUOUS ACCESS SHALL BE MAINTAINED FOR THE SURROUNDING PROPERTIES AT ALL TIMES DURING DEMOLITION OF THE EXISTING FACILITIES.
7. PRIOR TO DEMOLITION OCCURRING, ALL EROSION CONTROL DEVICES ARE TO BE INSTALLED.
8. CONTRACTOR MAY LIMIT SAW-CUT & PAVEMENT REMOVAL TO ONLY THOSE AREAS WHERE IT IS REQUIRED AS SHOWN ON THESE CONSTRUCTION PLANS BUT IF ANY DAMAGE IS INCURRED ON ANY OF THE SURROUNDING PAVEMENT, ETC. THE CONTRACTOR SHALL BE RESPONSIBLE FOR IT'S REMOVAL AND REPAIR.
9. DAMAGE TO ALL EXISTING CONDITIONS TO REMAIN WILL BE REPLACED AT CONTRACTOR'S EXPENSE.

DIGGERS HOTLINE

TO OBTAIN LOCATION OF PARTICIPANTS' UNDERGROUND FACILITIES BEFORE YOU DIG IN WISCONSIN

CALL 811 or
Toll Free 1-800-242-8511
(262)432-7910
Emergency Only (877) 500-9592
FAX 1-800-338-3860
FAX (414) 259-0947
Hearing Impaired TDD 1-800-542-2289

WIS. STATUTE 182.0175 (1974)
REQUIRES MIN. OF 3 WORK DAYS NOTICE BEFORE YOU EXCAVATE

TOPOGRAPHIC LEGEND

- 1" x 18" IRON PIPE SET
- 1-1/4" x 30" REBAR SET
- CHISELED "X" SET
- 3/4" REBAR FOUND
- 1" IRON PIPE FOUND
- 1-1/4" REBAR FOUND
- 2" IRON PIPE FOUND
- CHISELED "X" FOUND
- GOVERNMENT CORNER
- RECORDED AS
- CONIFEROUS TREE
- DECIDUOUS TREE
- EXIST. WOODS LINE
- WETLANDS
- SOIL BORING
- OVERHEAD POWER LINES
- UNDERGROUND ELECTRIC
- UNDERGROUND TELEPHONE
- UNDERGROUND FIBEROPTIC
- UNDERGROUND GAS
- UNDERGROUND CABLE TV
- EXIST. FENCE LINE
- SIGN
- POWER POLE
- GUY
- LIGHT POLE
- TELEPHONE PEDESTAL
- ELECTRIC PEDESTAL
- CABLE PEDESTAL
- EXIST. HYDRANT
- WATER VALVE
- WATER STOP BOX
- GAS VALVE
- EXIST STORM MANHOLE
- STORM INLET
- YARD DRAIN
- EXIST SANITARY MANHOLE
- EXIST. SAN. SEWER
- EXIST. STO. SEWER
- EXIST. WATER MAIN
- EXIST. SPOT ELEVATION
- CONTOUR W/ ELEVATION
- EXIST. TOP OF CURB ELEV.
- EXIST. FLOW LINE ELEV.
- FIRST FLOOR = 955.00
- TOPSOIL DEPTH
- INFILTRATION SOIL BORING

design matters

somerville
architects | engineers
Somerville Inc. | 2100 Riverside Drive, Green Bay, WI 54301-2305
P 920.437.8136 | F 920.437.1131 | www.somervilleinc.com

MEYER | BORGMAN | JOHNSON
STRUCTURAL DESIGN • ENGINEERING
TEL 320.251.3535 | www.mbjgroup.com
105 2ND STREET SOUTH
STE 100
DETROIT LAKES, MN 56501
SEE STRUCTURE.

Martenson & Eisele, Inc.
Planning
Environmental
Surveying
Engineering
Architecture
1377 Midway Road
Menasha, WI 54952
www.martenson-eisele.com
info@martenson-eisele.com
920.731.0381 | 800.236.0381

Revisions	Description	Date

This plans may not be reproduced, altered, in whole or in part, without the written permission of Somerville, Inc.
Ownership and rights of use of the plans may be obtained by writing to Somerville, Inc.
©Somerville, Inc.

DEMOLITION PLAN

NEW STORE FOR:
SKOGEN'S FESTIVAL FOODS
MENASHA, WISCONSIN

Date: 10/15/15
Project No. 6630
Sheet: C103

FESTIVAL FOODS: UTILITY LAYOUT PLAN

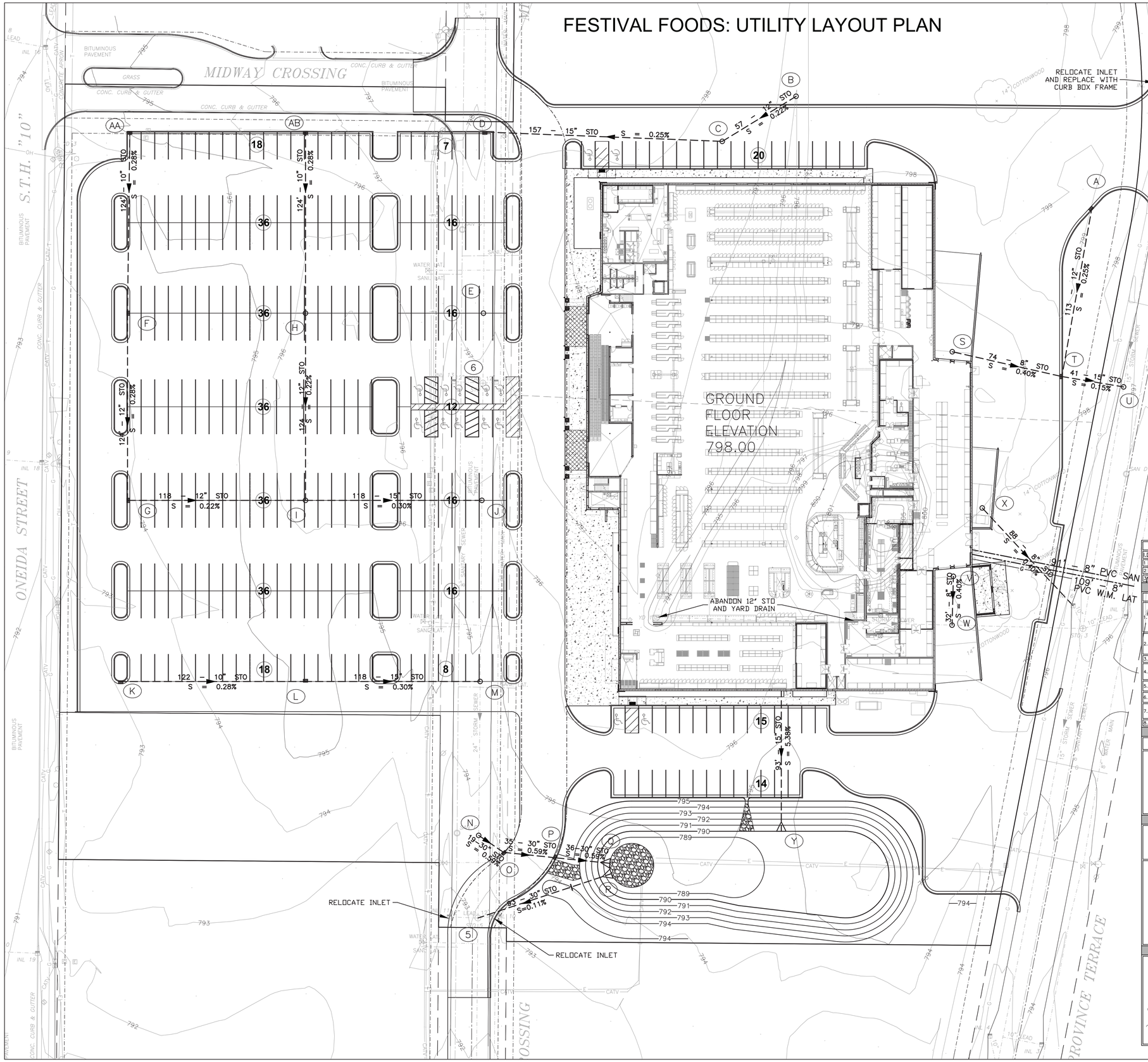

BENCHMARK DATA		
I.D.	DESCRIPTION:	ELEVATION:
1	TAG BOLT ON HYDRANT	795.55
2	TAG BOLT ON HYDRANT	792.87
3	TAG BOLT ON HYDRANT	796.98

UTILITY PLAN NOTES

1. THE LOCATION OF EXISTING UTILITY FACILITIES AS SHOWN ON THE PLAN ARE APPROXIMATE. THERE MAY BE OTHER UTILITIES WITHIN THE PROJECT AREA THAT ARE NOT SHOWN. THE CONTRACTOR SHALL HAVE ALL FACILITIES LOCATED PRIOR TO CONSTRUCTION. THE CONTRACTOR SHALL NOTIFY THE ENGINEER IMMEDIATELY IF A CONFLICT WITHIN THE WORK IS DISCOVERED.
2. ALL UTILITY CONNECTIONS SHALL BE DONE IN ACCORDANCE WITH THE "WISCONSIN STANDARD SPECIFICATIONS FOR SEWER AND WATER CONSTRUCTION, 6TH EDITION" AND THE CITY OF MENASHA STANDARD SPECIFICATIONS.
3. ALL WORK SHALL COMPLY WITH O.S.H.A. STANDARDS.
4. THE CONTRACTOR AND/OR OWNER SHALL NOT PROCEED WITH CONSTRUCTION ACTIVITIES UNTIL APPROPRIATE PERMITS/APPROVALS ARE OBTAINED.
5. THE CONTRACTOR SHALL OBTAIN AND PAY FOR ALL NECESSARY PERMITS FOR CONSTRUCTION.
6. THE CONTRACTOR SHALL CLEAN UP ALL EXCESS MATERIAL AND DEBRIS CAUSED AS A RESULT OF WORK UNDER THIS CONTRACT.
7. CONTRACTOR SHALL BE RESPONSIBLE FOR ANY AND ALL DAMAGE RESULTING FROM THE PERFORMANCE OF THE WORK UNDER THIS CONTRACT.
8. CONTRACTOR SHALL DISPOSE OF NON-SUITABLE MATERIAL OFF-SITE.

UTILITY LAYOUT PLAN LEGEND

EXISTING CONTOUR	STORM MANHOLE
848 PROPOSED CONTOUR	STORM INLET
STORM MAIN	SANITARY CLEANOUT HYDRANT
WATER MAIN	WATER VALVE
SANITARY MAIN	
UTILITY LATERAL	

DIGGERS HOTLINE

TO OBTAIN LOCATION OF PARTICIPANTS' UNDERGROUND FACILITIES BEFORE YOU DIG IN WISCONSIN

CALL 811 or
Toll Free 1-800-242-8511
(262)432-7910
Emergency Only (877) 500-9592
FAX 1-800-338-3860
FAX (414) 259-0947
Hearing Impaired TDD 1-800-542-2289

WIS. STATUTE 182.0175 (1974)
REQUIRES MIN. OF 3 WORK DAYS NOTICE BEFORE YOU EXCAVATE

TOPOGRAPHIC LEGEND

1" x 18" IRON PIPE SET	OVERHEAD POWER LINES	GAS VALVE
1-1/4" x 30" REBAR SET	UNDERGROUND ELECTRIC	EXIST STORM MANHOLE
CHISELED "X" SET	UNDERGROUND TELEPHONE	STORM INLET
3/4" REBAR FOUND	UNDERGROUND FIBEROPTIC	YARD DRAIN
1" IRON PIPE FOUND	UNDERGROUND GAS	EXIST SANITARY MANHOLE
1-1/4" REBAR FOUND	UNDERGROUND CABLE TV	EXIST. SAN. SEWER
2" IRON PIPE FOUND	EXIST. FENCE LINE	EXIST. STO. SEWER
CHISELED "X" FOUND	SIGN	EXIST. WATER MAIN
GOVERNMENT CORNER	POWER POLE	EXIST. SPOT ELEVATION
RECORDED AS	GUY	CONTOUR W/ ELEVATION
CONIFEROUS TREE	LIGHT POLE	EXIST. TOP OF CURB ELEV.
DECIDUOUS TREE	TELEPHONE PEDESTAL	EXIST. FLOW LINE ELEV.
EXIST. WOODS LINE	ELECTRIC PEDESTAL	FIRST FLOOR = 000.00
WETLANDS	CABLE PEDESTAL	TOPSOIL DEPTH
SOIL BORING	EXIST. HYDRANT	INFILTRATION SOIL BORING
	WATER VALVE	
	WATER STOP BOX	

design matters

somerville
architects | engineers
Somerville Inc. | 2100 Riverside Drive, Green Bay, WI 54301-2395
P 920.437.8136 | F 920.437.1131 | www.somervilleinc.com

MEYER | BORGMAN | JOHNSON
STRUCTURAL DESIGN + ENGINEERING
SEE STRUCTURE.

Martenson & Eisele, Inc.
Planning
Environmental
Engineering
Architecture
1377 Midway Road
Menasha, WI 54952
www.martenson-eisele.com
info@martenson-eisele.com
920.731.0381 | 800.236.0381

Revisions		
Rev	Description	Date
1	Remove items 10 & 11 in Utility Plan Notes	
2	Add Topographic Legend & Revise Utility Plan Legend	10-15-2015

These plans may not be reproduced without the written permission of Somerville, Inc.
Copyright, Rights, Ownership of this drawing may be claimed by and/or Somerville, Inc.
© Somerville, Inc.

UTILITY LAYOUT PLAN

NEW STORE FOR:
SKOGEN'S FESTIVAL FOODS
MENASHA, WISCONSIN

Date: 10/15/15
Project No. 6630
Sheet: C201

FESTIVAL FOODS: DRAINAGE PLAN

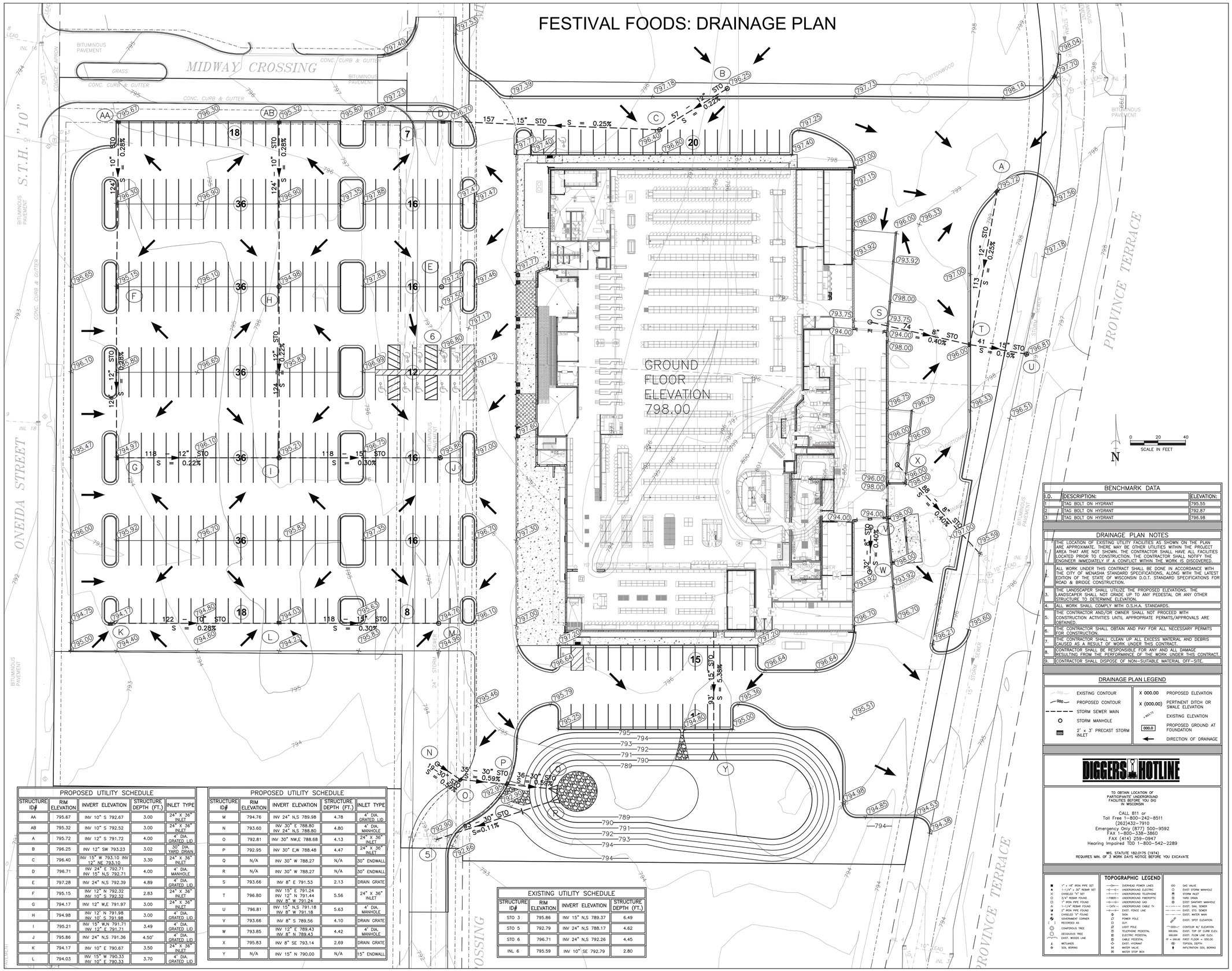

PROPOSED UTILITY SCHEDULE				
STRUCTURE ID#	RIM ELEVATION	INVERT ELEVATION	STRUCTURE DEPTH (FT.)	INLET TYPE
AA	795.67	INV 10" S 792.67	3.00	24" X 36" INLET
AB	795.32	INV 10" S 792.52	3.00	24" X 36" INLET
A	795.72	INV 12" S 791.72	4.00	4' DIA. GRATED LID
B	796.25	INV 12" SW 793.23	3.02	30" DIA. YARD DRAIN
C	796.40	INV 15" W 793.10 INV 12" NE 793.10	3.30	24" X 36" INLET
D	796.71	INV 24" E 792.71 INV 15" N,S 792.71	4.00	4' DIA. MANHOLE
E	797.28	INV 24" N,S 792.39	4.89	4' DIA. GRATED LID
F	795.15	INV 12" N 792.32 INV 10" S 792.32	2.83	24" X 36" INLET
G	794.17	INV 12" W,E 791.97	3.00	24" X 36" INLET
H	794.98	INV 12" N 791.98 INV 10" S 791.98	3.00	4' DIA. GRATED LID
I	795.21	INV 15" W,N 791.71 INV 12" E 791.71	3.49	4' DIA. GRATED LID
J	795.86	INV 24" N,S 791.36	4.50'	4' DIA. GRATED LID
K	794.17	INV 10" E 790.67	3.50	24" X 36" INLET
L	794.03	INV 15" W 790.33 INV 10" E 790.33	3.70	4' DIA. GRATED LID

PROPOSED UTILITY SCHEDULE				
STRUCTURE ID#	RIM ELEVATION	INVERT ELEVATION	STRUCTURE DEPTH (FT.)	INLET TYPE
M	794.76	INV 24" N,S 789.98	4.78	4' DIA. GRATED LID
N	793.60	INV 30" E 788.80 INV 24" N,S 788.80	4.80	4' DIA. MANHOLE
O	792.81	INV 30" NW,E 788.68	4.13	24" X 36" INLET
P	792.95	INV 30" E,W 788.48	4.47	24" X 36" INLET
Q	N/A	INV 30" W 788.27	N/A	30" ENDWALL
R	N/A	INV 30" W 788.27	N/A	30" ENDWALL
S	793.66	INV 8" E 791.53	2.13	DRAIN GRATE
T	796.80	INV 15" E 791.24 INV 12" N 791.44 INV 8" W 791.24	5.56	24" X 36" INLET
U	796.81	INV 15" N,S 791.18 INV 8" W 791.18	5.63	4' DIA. MANHOLE
V	793.66	INV 8" S 789.56	4.10	DRAIN GRATE
W	793.85	INV 12" E 789.43 INV 8" N 789.43	4.42	4' DIA. MANHOLE
X	795.83	INV 8" SE 793.14	2.69	DRAIN GRATE
Y	N/A	INV 15" N 790.00	N/A	15" ENDWALL

EXISTING UTILITY SCHEDULE			
STRUCTURE ID#	RIM ELEVATION	INVERT ELEVATION	STRUCTURE DEPTH (FT.)
STO 3	795.86	INV 15" N,S 789.37	6.49
STO 5	792.79	INV 24" N,S 788.17	4.62
STO 6	796.71	INV 24" N,S 792.26	4.45
INL 6	795.59	INV 10" SE 792.79	2.80

BENCHMARK DATA		
I.D.	DESCRIPTION:	ELEVATION:
1	TAG BOLT ON HYDRANT	795.55
2	TAG BOLT ON HYDRANT	792.87
3	TAG BOLT ON HYDRANT	796.98

DRAINAGE PLAN NOTES

1. THE LOCATION OF EXISTING UTILITY FACILITIES AS SHOWN ON THE PLAN ARE APPROXIMATE. THERE MAY BE OTHER UTILITIES WITHIN THE PROJECT AREA THAT ARE NOT SHOWN. THE CONTRACTOR SHALL HAVE ALL FACILITIES LOCATED PRIOR TO CONSTRUCTION. THE CONTRACTOR SHALL NOTIFY THE ENGINEER IMMEDIATELY IF A CONFLICT WITHIN THE WORK IS DISCOVERED.
2. ALL WORK UNDER THIS CONTRACT SHALL BE DONE IN ACCORDANCE WITH THE CITY OF MENASHA STANDARD SPECIFICATIONS, ALONG WITH THE LATEST EDITION OF THE STATE OF WISCONSIN D.O.T. STANDARD SPECIFICATIONS FOR ROAD & BRIDGE CONSTRUCTION.
3. THE LANDSCAPER SHALL UTILIZE THE PROPOSED ELEVATIONS; THE LANDSCAPER SHALL NOT GRADE UP TO ANY PEDESTAL OR ANY OTHER STRUCTURE TO DETERMINE ELEVATION.
4. ALL WORK SHALL COMPLY WITH O.S.H.A. STANDARDS.
5. THE CONTRACTOR AND/OR OWNER SHALL NOT PROCEED WITH CONSTRUCTION ACTIVITIES UNTIL APPROPRIATE PERMITS/APPROVALS ARE OBTAINED.
6. THE CONTRACTOR SHALL OBTAIN AND PAY FOR ALL NECESSARY PERMITS FOR CONSTRUCTION.
7. THE CONTRACTOR SHALL CLEAN UP ALL EXCESS MATERIAL AND DEBRIS CAUSED AS A RESULT OF WORK UNDER THIS CONTRACT.
8. CONTRACTOR SHALL BE RESPONSIBLE FOR ANY AND ALL DAMAGE RESULTING FROM THE PERFORMANCE OF THE WORK UNDER THIS CONTRACT.
9. CONTRACTOR SHALL DISPOSE OF NON-SUITABLE MATERIAL OFF-SITE.

DRAINAGE PLAN LEGEND

EXISTING CONTOUR	X 000.00 PROPOSED ELEVATION
PROPOSED CONTOUR	X (000.00) PERTINENT DITCH OR SWALE ELEVATION
STORM SEWER MAIN	EXISTING ELEVATION
STORM MANHOLE	PROPOSED GROUND AT FOUNDATION
2' x 3' PRECAST STORM INLET	DIRECTION OF DRAINAGE

DIGGERS HOTLINE

TO OBTAIN LOCATION OF PARTICIPANTS' UNDERGROUND FACILITIES BEFORE YOU DIG IN WISCONSIN

CALL 811 or
Toll Free 1-800-242-8511
(262)432-7910
Emergency Only (877) 500-9592
FAX 1-800-338-3860
FAX (414) 259-0947
Hearing Impaired TDD 1-800-542-2289

WIS. STATUTE 182.0175 (1974)
REQUIRES MIN. OF 3 WORK DAYS NOTICE BEFORE YOU EXCAVATE

TOPOGRAPHIC LEGEND

1" x 18" IRON PIPE SET	OVERHEAD POWER LINES	GAS VALVE
1-1/4" x 30" REBAR SET	UNDERGROUND ELECTRIC	EXIST. STORM MANHOLE
CHISELED "X" SET	UNDERGROUND TELEPHONE	STORM INLET
3/4" REBAR FOUND	UNDERGROUND FIBEROPTIC	YARD DRAIN
1" IRON PIPE FOUND	UNDERGROUND GAS	EXIST SANITARY MANHOLE
1-1/4" REBAR FOUND	UNDERGROUND CABLE TV	EXIST. SAN. SEWER
3" IRON PIPE FOUND	EXIST. FENCE LINE	EXIST. STO. SEWER
CHISELED "X" FOUND	SIGN	EXIST. WATER MAIN
GOVERNMENT CORNER	POWER POLE	EXIST. SPOT ELEVATION
RECORDED AS	GUY	CONTOUR W/ ELEVATION
CONIFEROUS TREE	LIGHT POLE	EXIST. TOP OF CURB ELEV.
DECIDUOUS TREE	TELEPHONE PEDESTAL	EXIST. FLOW LINE ELEV.
EXIST. WOODS LINE	ELECTRIC PEDESTAL	FIRST FLOOR = 000.00
WETLANDS	CABLE PEDESTAL	TOPSOIL DEPTH
SOIL BORING	EXIST. HYDRANT	INFILTRATION SOIL BORING
	WATER VALVE	
	WATER STOP BOX	

design matters

somerville
architects | engineers
Somerville Inc. | 2100 Riverside Drive, Green Bay, WI 54301-2305
P 920.437.8136 | F 920.437.1131 | www.somervilleinc.com

MEYER | BORGMAN | JOHNSON
STRUCTURAL DESIGN + ENGINEERING
TEL 320.251.5200 | info@mbjengineering.com | www.mbjengineering.com
SEE STRUCTURE.

Martenson & Eisele, Inc.
Planning
Environmental
Engineering
Architecture
1377 Midway Road
Menasha, WI 54952
www.martenson-eisele.com
info@martenson-eisele.com
920.751.0381 | 800.236.0381

Revisions	Description	Date
01	Dock Screen, Bumpers, and side walks removed	
02	Parking lot layout changed, curb & gutter, sidewalks, garden centers, moved, truck dock screen	09-11-2015

This plans may not be reproduced without the written permission of Somerville, Inc.
Copyright, all rights of this drawing may be violated by any person, or Permanent Reproduction.
© Somerville, Inc.

DRAINAGE PLAN

NEW STORE FOR:
SKOGEN'S FESTIVAL FOODS
MENASHA, WISCONSIN

Date: 10/15/15
Project No. 6630
Sheet: C301

FESTIVAL FOODS: EROSION CONTROL PLAN

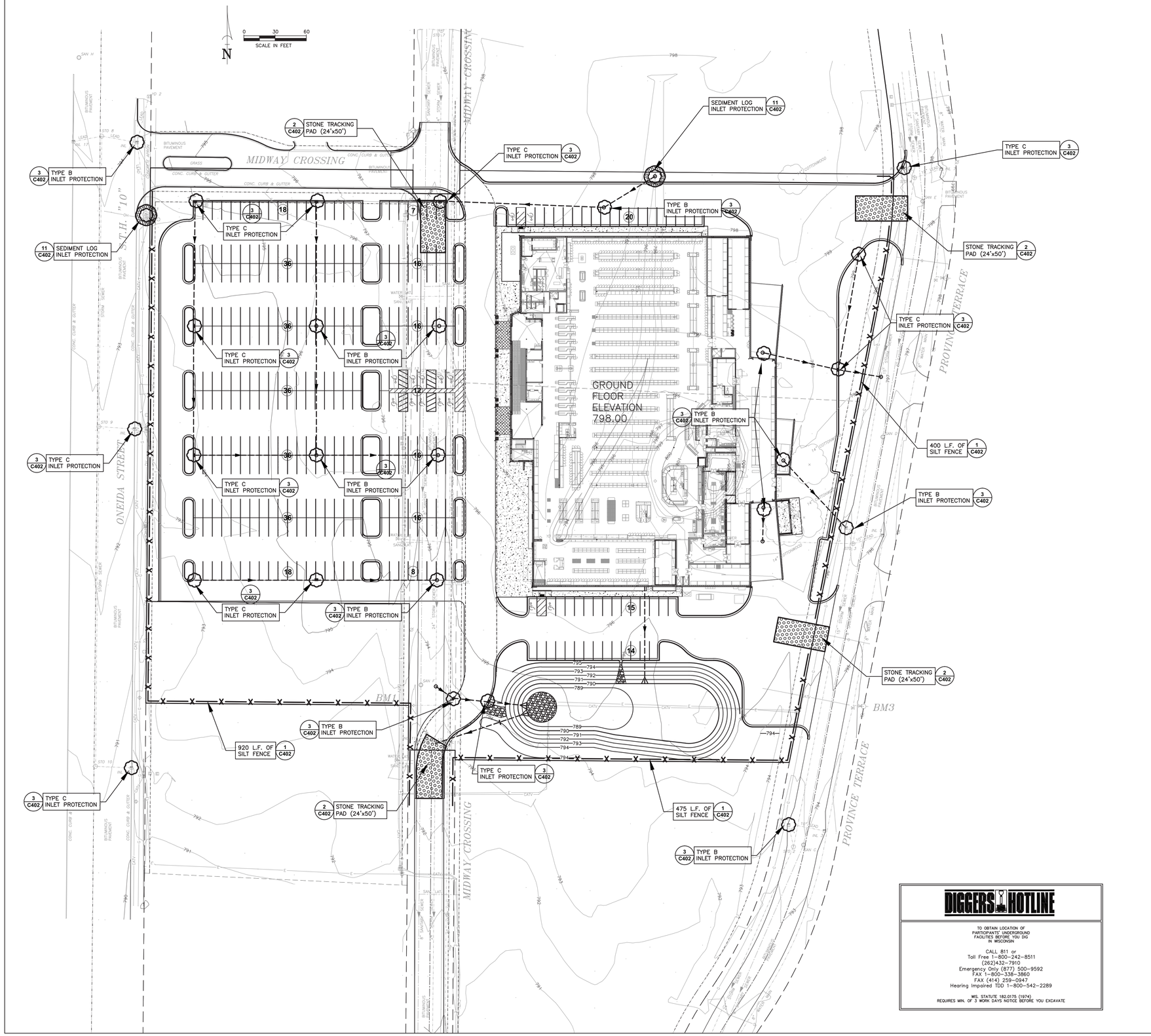

CONSTRUCTION SEQUENCE	
1.	Pre-Construction Meeting
2.	Installation of Silt Fence
3.	Installation of Rock Tracking Pad
4.	Topsoil Stripping of Storm Water Facility
5.	Stockpile Topsoil, Stabilize and Silt Fence Protection
6.	Excavation of Storm Water Facility
7.	Restoration of Storm Water Facility
8.	Topsoil Stripping of Building Area and Pavement Areas
9.	Stockpile Topsoil, Stabilize and Silt Fence Protection
10.	Rough Grading of Building Area and Pavement Areas
11.	Installation of sewer and water facilities
12.	Protection of new inlets as shown on Erosion Control Plan
13.	Building Foundation and Footings
14.	Placement and Grading of Building Excess Clay
15.	Topsoil Placement of all grassed and landscaped areas
16.	Installation and compaction of stone for parking lots, access drives, sidewalks, curb and gutter
17.	Finalize pavement and building construction
18.	Complete fine grading and landscaping
19.	Restoration of all grassed, landscaped, and other disturbed areas
20.	Remove inlet/yard drain protection and silt fence after vegetation is established
21.	Maintenance plan

EROSION CONTROL NOTES

1. THE CONTRACTOR SHALL INSTALL SILT FENCE AROUND THE PERIMETER OF THE PROJECT AS SHOWN ON THIS PLAN PRIOR TO ANY CONSTRUCTION INCLUDING STRIPPING TOPSOIL.
2. ALL EROSION CONTROL DEVICES SHALL BE MAINTAINED BY THE CONTRACTOR UNTIL THE COMPLETION OF HIS CONTRACT.
3. THE CONTRACTOR SHALL MAINTAIN SAID EROSION CONTROL DEVICES UNTIL THE COMPLETION OF HIS CONTRACT AND SHALL NOT REMOVE THE EROSION CONTROL DEVICES UNTIL VEGETATION IS ESTABLISHED.
4. THE GRADING CONTRACTOR SHALL SEED AND MULCH ALL DISTURBED AREAS IMMEDIATELY WHEN FINAL GRADE IS ESTABLISHED. SEED MIXTURE SHALL BE ACCORDING TO THE SPECIFICATIONS.
5. THE CONTRACTORS SHALL PREVENT TRACKING ON EXISTING STREETS. ANY SEDIMENT TRACKED ONTO EXISTING STREETS SHALL BE CLEANED UP DAILY.
6. INSTALLATION AND MAINTENANCE OF EROSION CONTROL SHALL BE DONE IN ACCORDANCE WITH THE SPECIFICATIONS.
7. SILT FENCES DAMAGED DURING CONSTRUCTION SHALL BE REPAIRED AS SOON AS WORK IS COMPLETE IN THAT AREA.

GENERAL NOTES

1. SITE DEWATERING. WATER PUMPED FROM THE SITE SHALL BE TREATED BY TEMPORARY SEDIMENTATION BASINS OR OTHER APPROPRIATE CONTROLS DESIGNED FOR THE HIGHEST DEWATERING PUMPING RATE. WATER MAY NOT BE DISCHARGED IN A MANNER THAT CAUSES EROSION OF THE SITE OR RECEIVING CHANNELS. (NOT ANTICIPATED)
2. WASTE AND MATERIAL DISPOSAL. ALL WASTE AND UNUSED BUILDING MATERIALS (INCLUDING GARBAGE, DEBRIS, CLEANING WASTES, WASTEWATER, TOXIC MATERIALS OR HAZARDOUS MATERIALS) SHALL BE PROPERLY DISPOSED OF AND NOT ALLOWED TO BE CARRIED BY RUNOFF INTO A RECEIVING CHANNEL OR STORM SEWER SYSTEM.
3. TRACKING. THIS SITE SHALL STABILIZE THE EXISTING DRIVE WITH 3" TO 6" (12" THICK) CLEAR AGGREGATE SUFFICIENT TO PREVENT SEDIMENT FROM BEING TRACKED ONTO PUBLIC OR PRIVATE ROAD WAYS AS APPROVED BY THE INSPECTOR. ANY SEDIMENT REACHING A PUBLIC OR PRIVATE ROAD SHALL BE REMOVED BEFORE THE END OF EACH WORK DAY. FLUSHING MAY NOT BE USED UNLESS THE SEDIMENT WILL BE CONTROLLED BY A FILTER FABRIC BARRIER, SEDIMENT TRAP, SEDIMENT BASIN OR EQUIVALENT. TRACKING PAD DIMENSIONS ARE SHOWN ON THE EROSION CONTROL PLAN (24'X50' MIN).
4. SEDIMENT CLEANUP. ALL OFF-SITE SEDIMENT DEPOSITS OCCURRING AS A RESULT OF A STORM EVENT SHALL BE CLEANED UP BY THE END OF THE NEXT WORK DAY. ALL OTHER OFF-SITE SEDIMENT DEPOSITS OCCURRING AS A RESULT OF LAND DISTURBING ACTIVITIES SHALL BE CLEANED UP BY THE END OF THE WORK DAY.
5. DISTURBANCE TIMING. ALL ACTIVITIES ON THE SITE SHALL BE CONDUCTED IN A LOGICAL SEQUENCE TO MINIMIZE THE AREA OF BARE SOIL EXPOSED AT ANY ONE TIME. EXISTING VEGETATION SHALL BE MAINTAINED AS LONG AS POSSIBLE.

CONTRACTOR RESPONSIBILITIES

1. NOTIFY THE INSPECTOR WITHIN 48 HOURS OF COMMENCING ANY LAND DISTURBING OR LAND DEVELOPMENT ACTIVITY;
2. NOTIFY THE ENGINEER OF COMPLETION OF ANY EROSION CONTROL MEASURES WITHIN 13 DAYS AFTER COMPLETION;
3. OBTAIN PERMISSION IN WRITING FROM THE ENGINEER PRIOR TO MODIFYING THE EROSION CONTROL PLAN.
4. INSTALL ALL EROSION CONTROL MEASURES AS IDENTIFIED IN THE APPROVED EROSION CONTROL PLAN;
5. REPAIR ANY SILTATION OR EROSION DAMAGE TO ADJOINING SURFACES AND DRAINAGE WAYS RESULTING FROM LAND DEVELOPING OR DISTURBING ACTIVITIES;
6. MAINTAIN ALL ON- AND OFF- SITE STORM WATER DRAINAGE SYSTEMS AS IDENTIFIED ON THE EROSION CONTROL PLAN.
7. REPAIR ANY EROSION CONTROL SYSTEM INSTALLED IN ACCORDANCE TO THE EROSION CONTROL PLAN.
8. INSPECT THE CONSTRUCTED EROSION CONTROL MEASURES AFTER EACH RAIN OF 0.5 INCHES OR MORE AND AT LEAST ONCE EACH WEEK AND MAKE NEEDED REPAIRS.
9. ALLOW THE ENGINEER TO ENTER THE SITE FOR THE PURPOSE OF INSPECTING COMPLIANCE WITH THE EROSION CONTROL PLAN OR FOR PERFORMING ANY WORK NECESSARY TO BRING THE SITE INTO COMPLIANCE WITH THE EROSION CONTROL PLAN.
10. KEEP A COPY OF THE APPROVED EROSION CONTROL PLAN ON THE SITE.
11. ALL AREAS BEING SEEDED SHOULD HAVE A MINIMUM OF 4 INCHES OF SUITABLE TOPSOIL.
12. GRADING CONTRACTOR SHALL MAINTAIN EROSION CONTROL UNTIL TERMINATION NOTICE IS ISSUED.
13. ALL DISTURBED AREAS SHALL BE RESTORED WITHIN 7 DAYS OF COMPLETION OF WORK WITHIN THESE AREAS. THIS INCLUDES SOIL STOCKPILES, WHICH SHALL BE STABILIZED BY MULCHING, TEMPORARY SEEDING, SODDING OR COVERING W/ TARPS.
14. GRADE & GRAVEL CONTRACTOR IS RESPONSIBLE FOR REMOVING ALL DEVICES AFTER SITE STABILIZATION.

EROSION CONTROL PLAN KEY LEGEND

- 1 SILT FENCE — 1 C402
- 2 TRACKING PROTECTION — 2 C402
- 3 INLET PROTECTION TYPES A,B,C, & D — 3 C402
- 4 INLET PROTECTION TYPE D-M — 4 C402
- 5 INLET PROTECTION TYPE D-HR — 5 C402
- 6 SANDBAG CULVERT PIPE DITCH CHECK — 6 C402
- 7 DEWATERING DETAIL — 7 C402
- 8 EROSION CONTROL MAT DETAIL (CLASS1, TYPE A) — 9 C402
- 9 EROSION CONTROL MAT DETAIL (CLASS1, TYPE B) — 10 C402
- 10 SEDIMENT LOG INLET PROTECTION — 11 C402
- 11 SEDIMENT LOG CHANNEL DITCH CHECK — 12 C402

TOPOGRAPHIC LEGEND

1" x 18" IRON PIPE SET	OHP — OVERHEAD POWER LINES	GAS VALVE
1-1/4" x 30" REBAR SET	UE — UNDERGROUND ELECTRIC	EXIST. STORM MANHOLE
CHISELED "X" SET	UT — UNDERGROUND TELEPHONE	STORM INLET
3/4" REBAR FOUND	FIBER — UNDERGROUND FIBEROPTIC	YARD DRAIN
1" IRON PIPE FOUND	UG — UNDERGROUND GAS	EXIST SANITARY MANHOLE
1-1/4" REBAR FOUND	CATV — UNDERGROUND CABLE TV	EXIST. SAN. SEWER
2" IRON PIPE FOUND	EF — EXIST. FENCE LINE	EXIST. STO. SEWER
CHISELED "X" FOUND	SIGN	EXIST. WATER MAIN
GOVERNMENT CORNER	POWER POLE	EXIST. SPOT ELEVATION
RECORDED AS	GUY	CONTOUR W/ ELEVATION
CONIFEROUS TREE	LIGHT POLE	EXIST. TOP OF CURB ELEV.
DECIDUOUS TREE	TELEPHONE PEDESTAL	EXIST. FLOW LINE ELEV.
EXIST. WOODS LINE	ELECTRIC PEDESTAL	FIRST FLOOR = 000.00
WETLANDS	CABLE PEDESTAL	TOPSOIL DEPTH
SOIL BORING	EXIST. HYDRANT	INFILTRATION SOIL BORING
	WATER VALVE	
	WATER STOP BOX	

DIGGERS HOTLINE

TO OBTAIN LOCATION OF PARTICIPANTS' UNDERGROUND FACILITIES BEFORE YOU DIG IN WISCONSIN

CALL 811 or
Toll Free 1-800-242-8511
(262)432-7910
Emergency Only (877) 500-9592
FAX 1-800-338-3860
FAX (414) 259-0947
Hearing Impaired TDD 1-800-542-2289

WIS. STATUTE 182.0175 (1974)
REQUIRES MIN. OF 3 WORK DAYS NOTICE BEFORE YOU EXCAVATE

design matters

somerville
architects | engineers
Somerville Inc. | 2100 Riverside Drive, Green Bay, WI 54301-2330
P 920.437.8136 | F 920.437.1131 | www.somervilleinc.com

MEYER | BORGMAN | JOHNSON
STRUCTURAL DESIGN + ENGINEERING
SEE STRUCTURE.
10.20.2015 REVISIONS TO DEVELOPMENTS
TEL 920.831.0201 www.mbjgroup.com

Martenson & Eisele, Inc.
Planning
Environmental
Engineering
Architecture
1377 N. Mayfair Road
Menasha, WI 54952
www.martenson-eisele.com
info@martenson-eisele.com
920.731.0381 | 800.236.0381

Revisions	Description	Date
Rev.	Text protection issues to resolve new sections	10-15-2015

This plans may not be reproduced, altered, or used without the permission of Somerville, Inc.
© Somerville, Inc.
Permission@somervilleinc.com

EROSION CONTROL PLAN

NEW STORE FOR:
SKOGEN'S FESTIVAL FOODS
MENASHA, WISCONSIN

Date: 10/15/15
Project No. 6630
Sheet: C401

FESTIVAL FOODS: EROSION CONTROL DETAILS

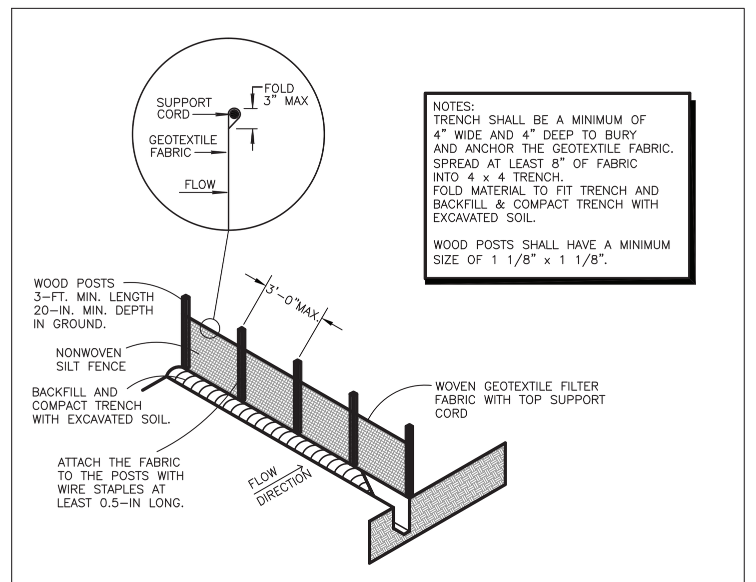

NOTES:
TRENCH SHALL BE A MINIMUM OF 4" WIDE AND 4" DEEP TO BURY AND ANCHOR THE GEOTEXTILE FABRIC. SPREAD AT LEAST 8" OF FABRIC INTO 4 x 4 TRENCH. FOLD MATERIAL TO FIT TRENCH AND BACKFILL & COMPACT TRENCH WITH EXCAVATED SOIL.

WOOD POSTS SHALL HAVE A MINIMUM SIZE OF 1 1/8" x 1 1/8".

1 / C4.2 **SILT FENCE DETAIL**
NTS

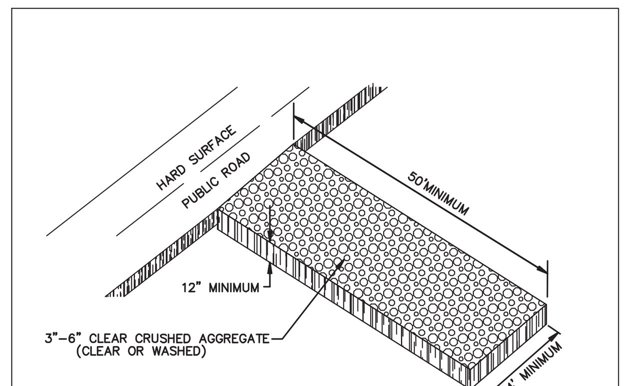

2 / C4.2 **TRACKING PAD: CONST. ENTRANCE**
NTS

NOTE: DETAILS NOT UTILIZED ON PLANS ARE FOR INFORMATIONAL PURPOSES IN CASE OF UNANTICIPATED FIELD CONDITIONS.

FIGURE 1. INLET PROTECTION TYPES A, B, C AND D

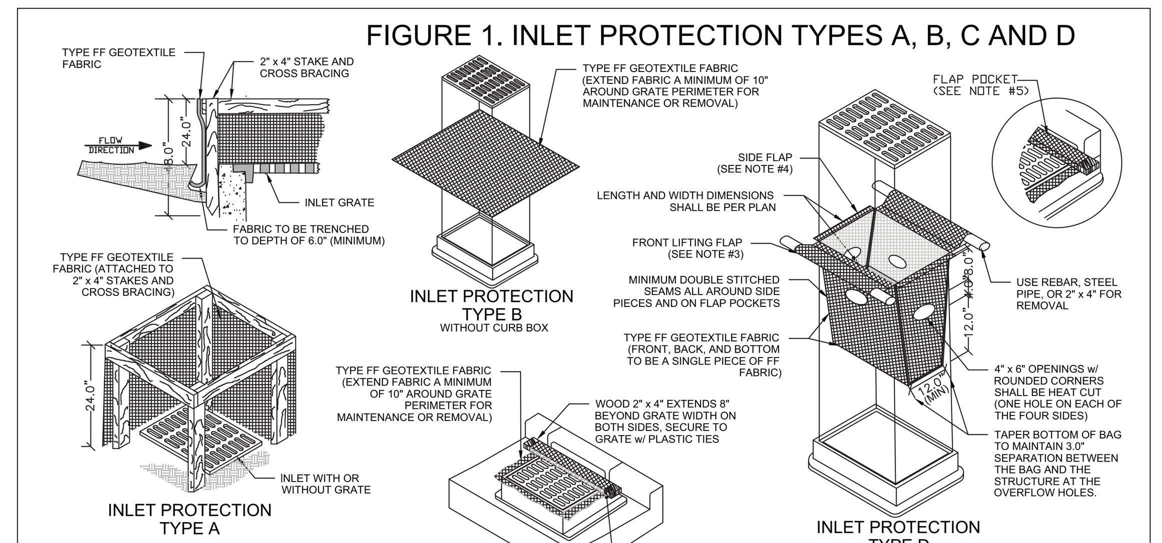

NOTES:

1. TAPER BOTTOM OF BAG TO MAINTAIN THREE INCHES OF CLEARANCE BETWEEN THE BAG AND THE STRUCTURE, MEASURED FROM THE BOTTOM OF THE OVERFLOW OPENINGS TO THE STRUCTURE WALL.
2. GEOTEXTILE FABRIC TYPE FF FOR FLAPS, TOP AND BOTTOM OF OUTSIDE OF FILTER BAG. FRONT, BACK, AND BOTTOM OF FILTER BAG BEING ONE PIECE.
3. FRONT LIFTING FLAP IS TO BE USED WHEN REMOVING AND MAINTAINING FILTER BAG.
4. SIDE FLAPS SHALL BE A MAXIMUM OF TWO INCHES LONG. FOLD THE FABRIC OVER AND REINFORCE WITH MULTIPLE STITCHES.
5. FLAP POCKETS SHALL BE LARGE ENOUGH TO ACCEPT WOOD 2" x 4". THE REBAR, STEEL PIPE, OR WOOD SHALL BE INSTALLED IN THE REAR FLAP AND SHALL NOT BLOCK THE TOP HALF OF THE CURB FACE OPENING.

MAINTENANCE NOTES:

1. WHEN REMOVING OR MAINTAINING INLET PROTECTION, CARE SHALL BE TAKEN SO THAT THE SEDIMENT TRAPPED IN THE FABRIC DOES NOT FALL INTO THE STRUCTURE. MATERIAL THAT HAS FALLEN INTO THE INLET SHALL BE IMMEDIATELY REMOVED.

WISCONSIN DNR
08/2014 REVISION DATE
NOT TO SCALE
1060 TECHNICAL STANDARD No.

3 / C4.2 **INLET PROTECTION DETAIL TYPES A,B,C, & D**
NTS

FIGURE 2. INLET PROTECTION TYPE D-M

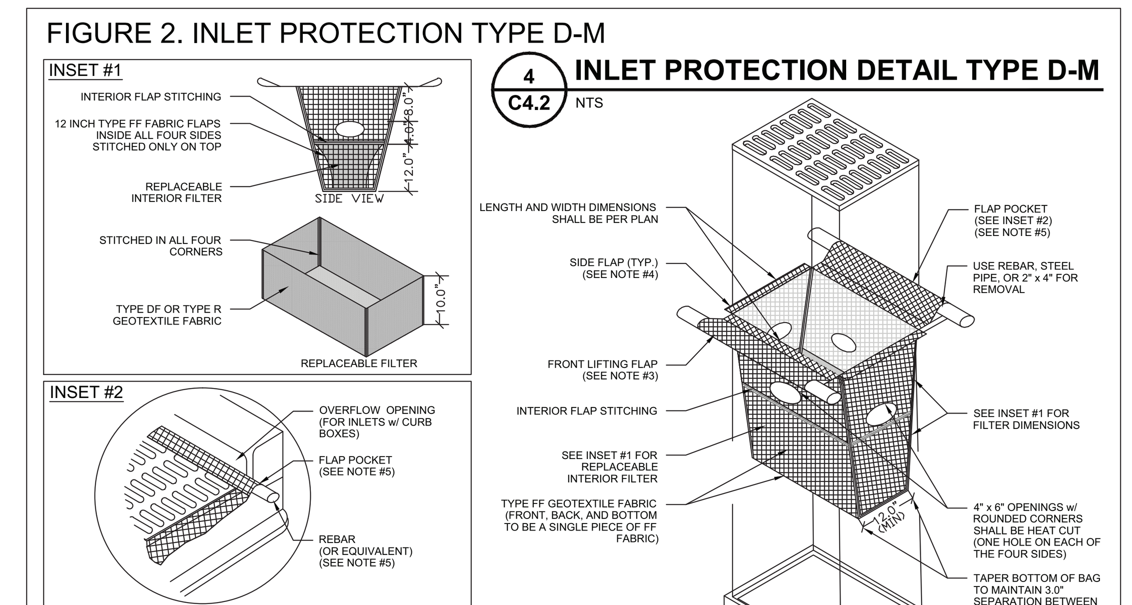

4 / C4.2 **INLET PROTECTION DETAIL TYPE D-M**
NTS

NOTES:

1. TAPER BOTTOM OF BAG TO MAINTAIN THREE INCHES OF CLEARANCE BETWEEN THE BAG AND THE STRUCTURE, MEASURED FROM THE BOTTOM OF THE OVERFLOW OPENINGS TO THE STRUCTURE WALL.
2. GEOTEXTILE FABRIC TYPE FF FOR FLAPS, TOP AND BOTTOM OF OUTSIDE OF FILTER BAG. FRONT, BACK, AND BOTTOM OF FILTER BAG BEING ONE PIECE.
3. FRONT LIFTING FLAP IS TO BE USED WHEN REMOVING AND MAINTAINING FILTER BAG.
4. SIDE FLAPS SHALL BE A MAXIMUM OF TWO INCHES LONG. FOLD THE FABRIC OVER AND REINFORCE WITH MULTIPLE STITCHES.
5. FLAP POCKETS SHALL BE LARGE ENOUGH TO ACCEPT WOOD 2" x 4". THE REBAR, STEEL PIPE, OR WOOD SHALL BE INSTALLED IN THE REAR FLAP AND SHALL NOT BLOCK THE TOP HALF OF THE CURB FACE OPENING.

MAINTENANCE NOTES:

1. WHEN REMOVING OR MAINTAINING INLET PROTECTION, CARE SHALL BE TAKEN SO THAT THE SEDIMENT TRAPPED IN THE FABRIC DOES NOT FALL INTO THE STRUCTURE. MATERIAL THAT HAS FALLEN INTO THE STRUCTURE SHALL BE IMMEDIATELY REMOVED.

WISCONSIN DNR
1060 TECHNICAL STANDARD No.
08/2014 REVISION DATE
NOT TO SCALE

5 / C4.2 **INLET PROTECTION DETAIL TYPE D-HR**
NTS

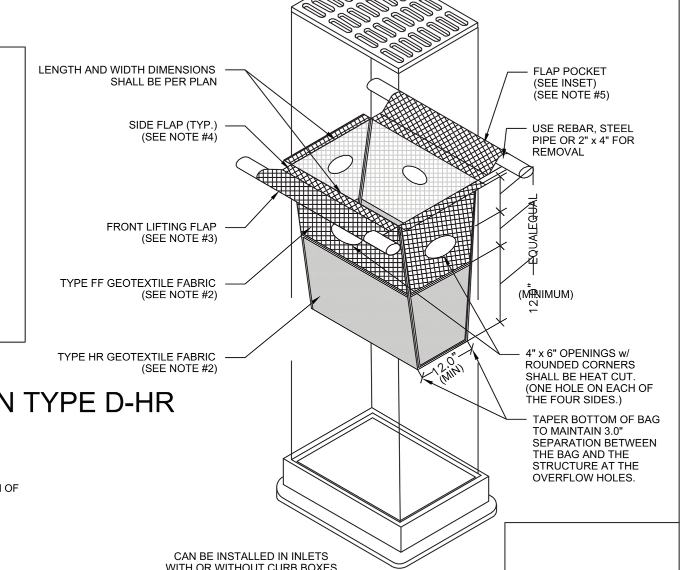

FIGURE 3. INLET PROTECTION TYPE D-HR

NOTES:

1. TAPER BOTTOM OF BAG TO MAINTAIN THREE INCHES OF CLEARANCE BETWEEN THE BAG AND THE STRUCTURE, MEASURED FROM THE BOTTOM OF THE OVERFLOW OPENINGS TO THE STRUCTURE WALL.
2. GEOTEXTILE FABRIC, TYPE FF FOR FLAPS AND TOP HALF OF FILTER BAG. GEOTEXTILE FABRIC, TYPE HR FOR BOTTOM HALF OF FILTER BAG WITH FRONT, BACK, AND BOTTOM BEING ONE PIECE.
3. FRONT LIFTING FLAP IS TO BE USED WHEN REMOVING AND MAINTAINING FILTER BAG.
4. SIDE FLAPS SHALL BE A MAXIMUM OF TWO INCHES LONG. FOLD THE FABRIC OVER AND REINFORCE WITH MULTIPLE STITCHES.
5. FLAP POCKETS SHALL BE LARGE ENOUGH TO ACCEPT WOOD 2" x 4". THE REBAR, STEEL PIPE, OR WOOD SHALL BE INSTALLED IN THE REAR FLAP AND SHALL NOT BLOCK THE TOP HALF OF THE CURB FACE OPENING.

MAINTENANCE NOTES:

1. WHEN REMOVING OR MAINTAINING INLET PROTECTION, CARE SHALL BE TAKEN SO THAT THE SEDIMENT TRAPPED IN THE FABRIC DOES NOT FALL INTO THE STRUCTURE. MATERIAL THAT HAS FALLEN INTO THE STRUCTURE SHALL BE IMMEDIATELY REMOVED.

1060 TECHNICAL STANDARD No.
08/2014 REVISION DATE
NOT TO SCALE

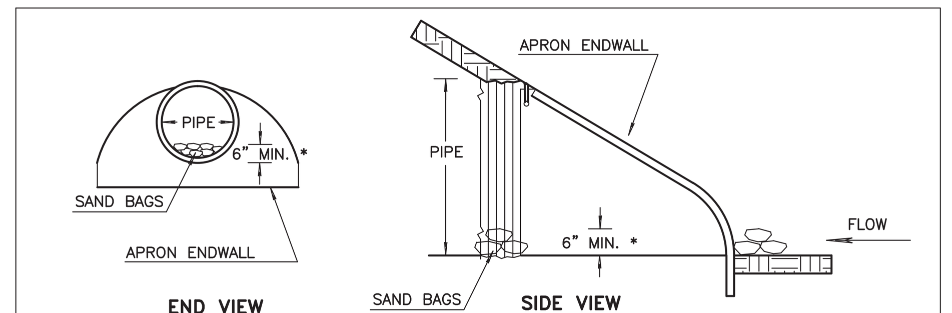

6 / C4.2 **SANDBAG CULVERT PIPE DITCH CHECK**
NTS

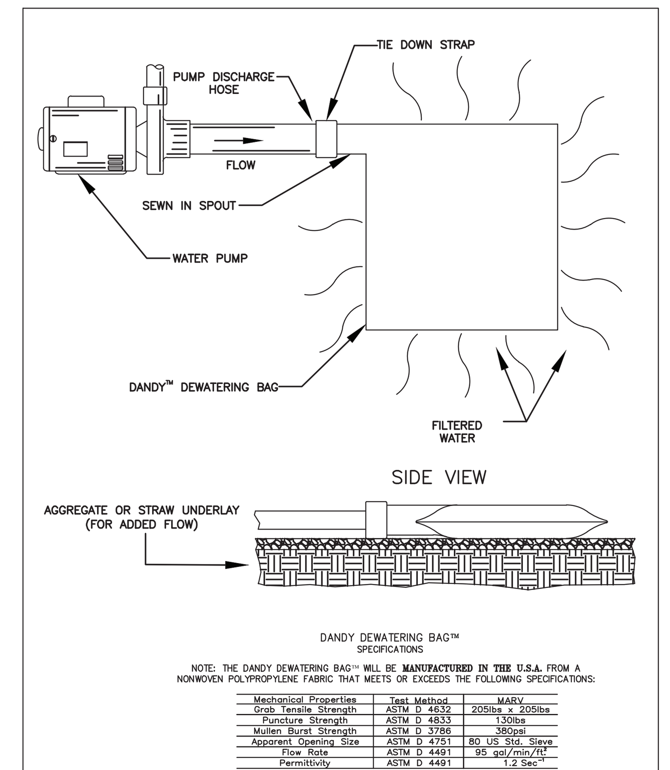

7 / C4.2 **DEWATERING DETAIL**
NTS

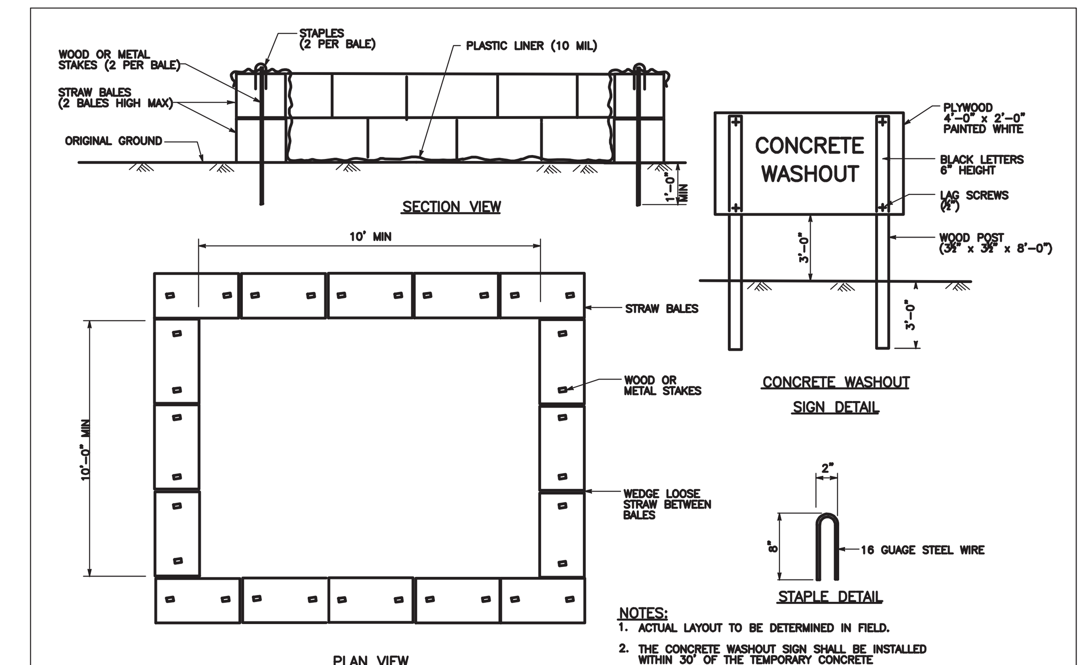

NOTES:
1. ACTUAL LAYOUT TO BE DETERMINED IN FIELD.
2. THE CONCRETE WASHOUT SIGN SHALL BE INSTALLED WITHIN 30' OF THE TEMPORARY CONCRETE WASHOUT FACILITY.

8 / C4.2 **TEMPORARY CONCRETE WASHOUT FACILITY**
NTS

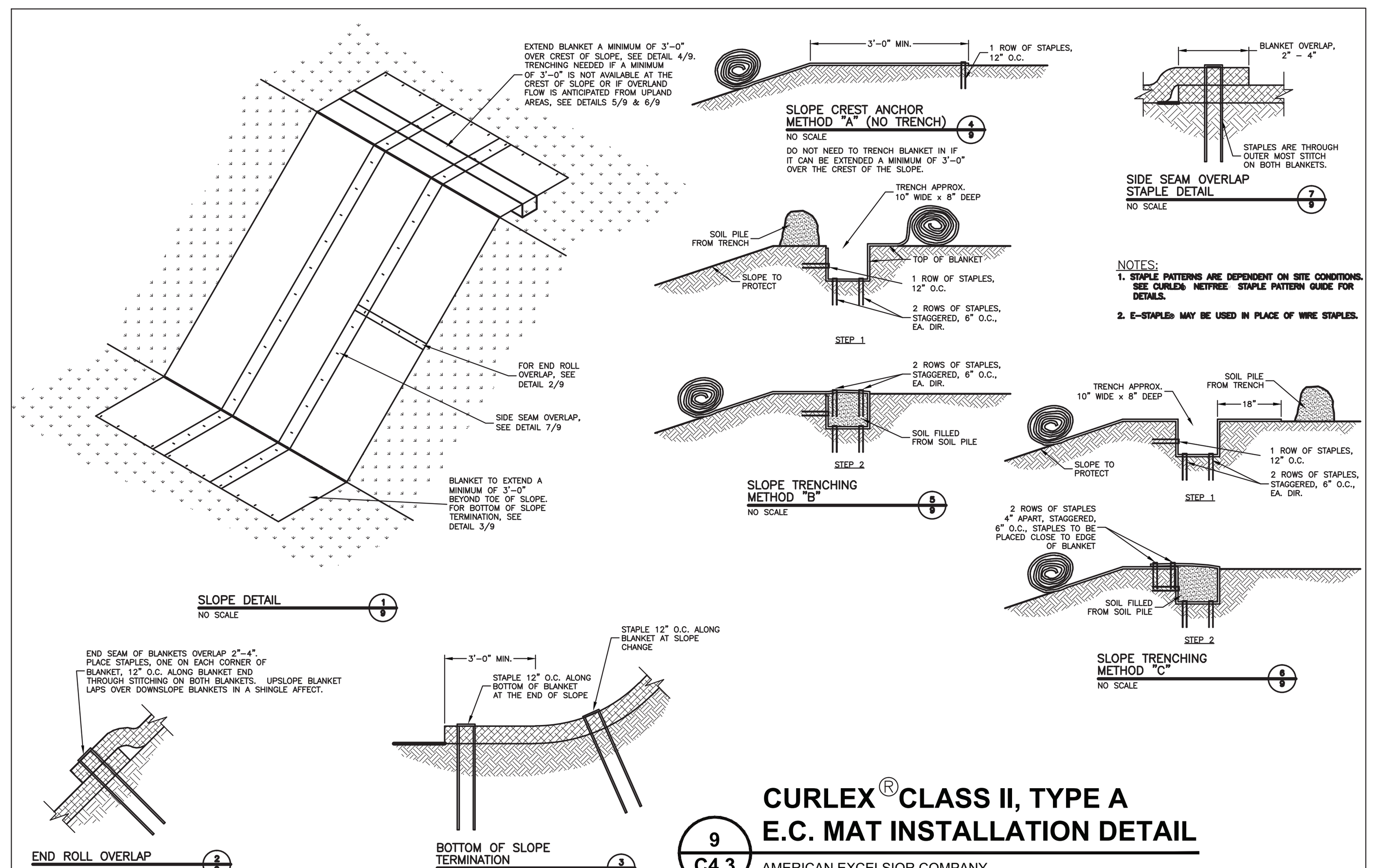

9 / C4.3 **CURLEX®CLASS II, TYPE A E.C. MAT INSTALLATION DETAIL**
AMERICAN EXCELSIOR COMPANY

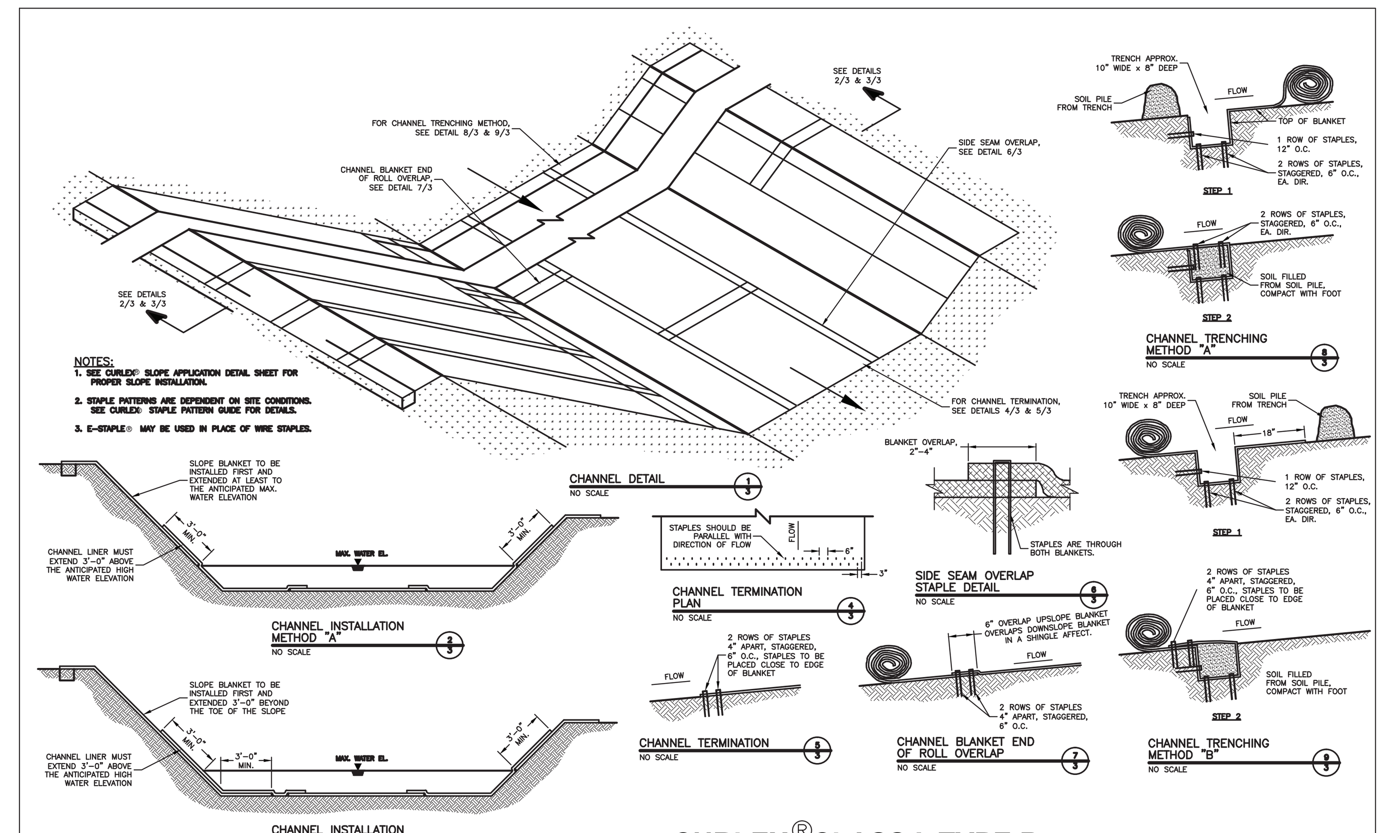

10 / C4.3 **CURLEX®CLASS I, TYPE B E.C. MAT INSTALLATION DETAIL**
AMERICAN EXCELSIOR COMPANY

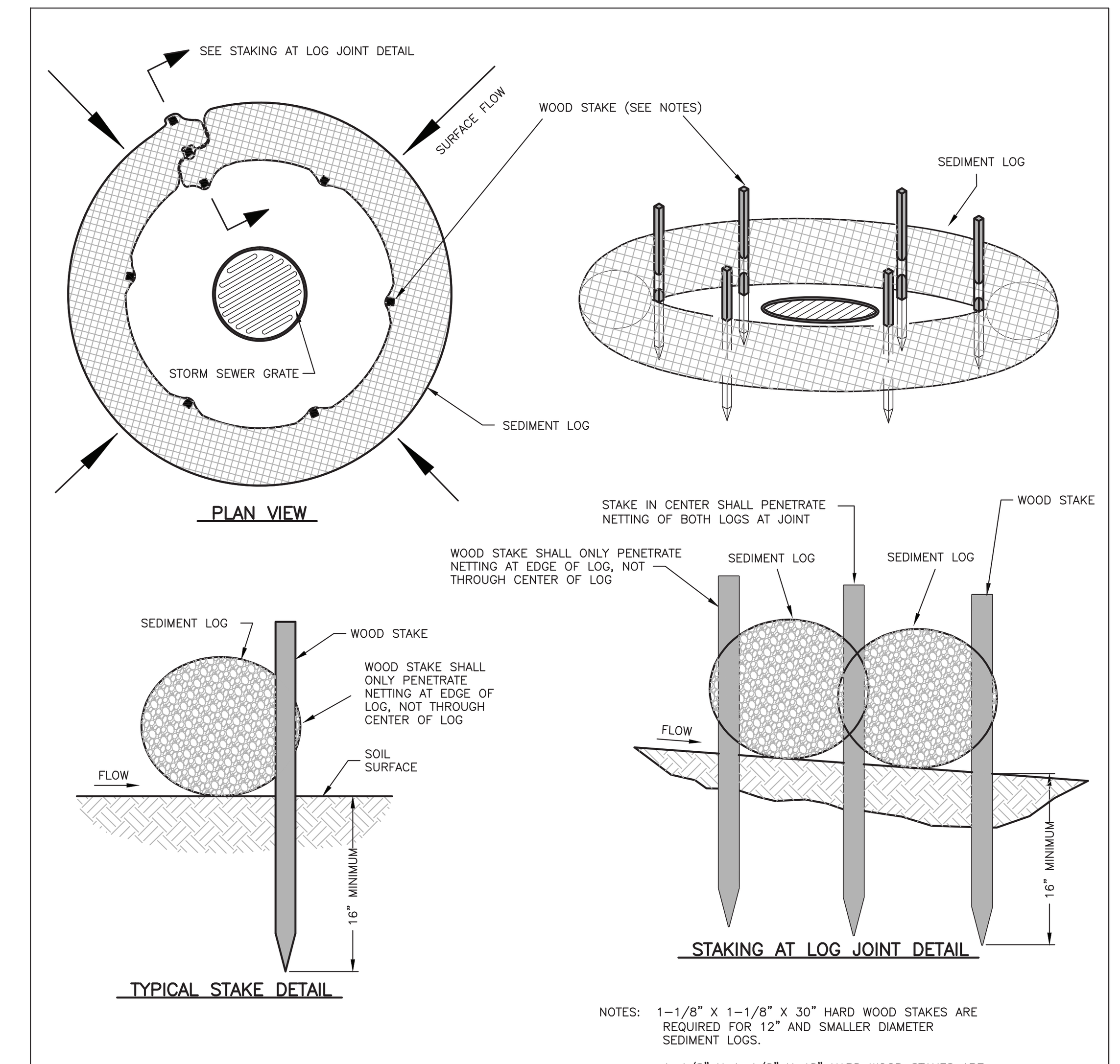

NOTES: 1-1/8" X 1-1/8" X 30" HARD WOOD STAKES ARE REQUIRED FOR 12" AND SMALLER DIAMETER SEDIMENT LOGS.

1-1/8" X 1-1/8" X 48" HARD WOOD STAKES ARE REQUIRED FOR SEDIMENT LOGS GREATER THAN 12" DIAMETER.

IN LOOSE, UNCONSOLIDATED SOILS, IT IS RECOMMENDED TO TRENCH IN THE BOTTOM OF THE SEDIMENT LOG 2".

11 / C4.3 **SEDIMENT LOG INLET PROTECTION**
NTS

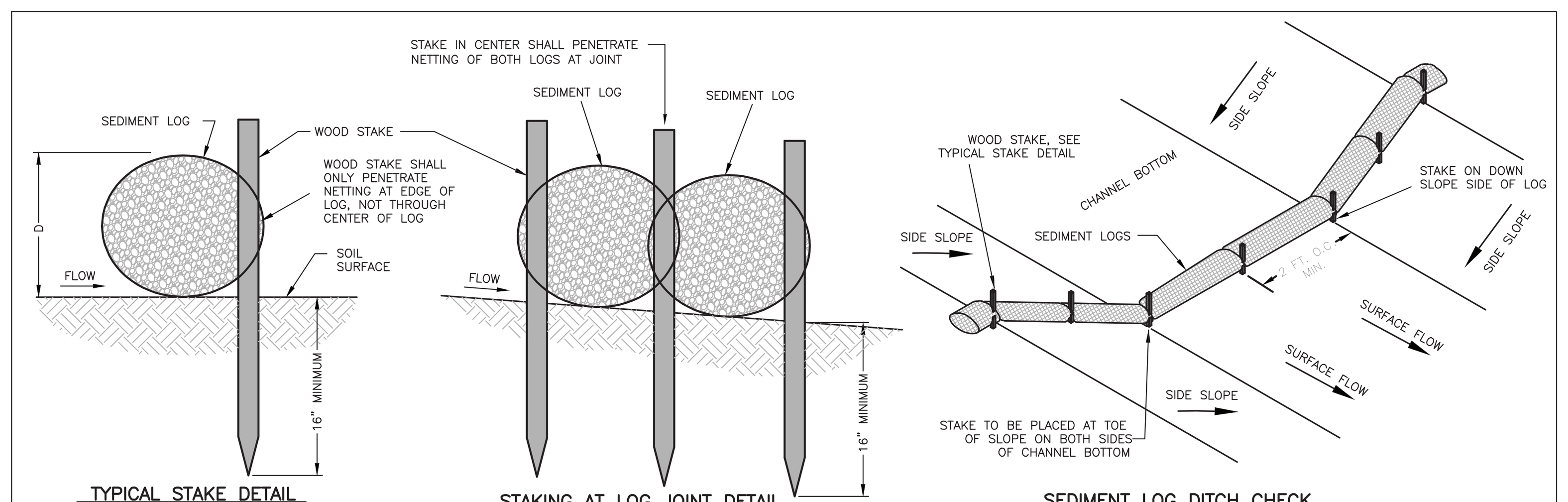

[DISTANCE BETWEEN CHANNEL BOTTOM AND TOP OF INSTALLED SEDIMENT LOGS (D)(ft) / CHANNEL GRADIENT (%)] X 100 = SEDIMENT LOGS SPACING (ft)

NOTES: 1-1/8" X 1-1/8" X 30" HARD WOOD STAKES ARE REQUIRED FOR 12" AND SMALLER DIAMETER SEDIMENT LOGS.

1-1/8" X 1-1/8" X 48" HARD WOOD STAKES ARE REQUIRED FOR SEDIMENT LOGS GREATER THAN 12" DIAMETER.

IN LOOSE, UNCONSOLIDATED SOILS, IT IS RECOMMENDED TO TRENCH IN THE BOTTOM OF THE SEDIMENT LOG 2".

12 / C4.3 **SEDIMENT LOG CHANNEL DITCH CHECK**
NTS

design matters
somerville architects | engineers
Somerville Inc. | 2100 Riverside Drive, Green Bay, WI 54301-2390
P 920.437.8136 | F 920.437.1131 | www.somervilleinc.com

MEYER BORGMAN JOHNSON
STRUCTURAL DESIGN + ENGINEERING
TEL: 920.351.0525 | www.mbjeng.com
125 SOUTH BROADWAY SUITE 200 DE PERE, WI 54115
SEE STRUCTURE.

Martenson & Eisele, Inc.
1377 Midway Road Menasha, WI 54952
www.martenson-eisele.com
info@martenson-eisele.com
920.731.0381 1.800.236.0381
Planning Environmental Surveying Engineering Architecture

Revisions	Description	Date

This drawing may not be reproduced without the written permission of Somerville, Inc.
Permission or copies of this drawing may be obtained by emailing Planrequests@somervilleinc.com ©2015 ©Somerville, Inc.

EROSION CONTROL DETAILS

NEW STORE FOR:
SKOGEN'S FESTIVAL FOODS
MENASHA, WISCONSIN

Date: 09/30/15
Project No. 6630
Sheet:
C402

FESTIVAL FOODS: POND PLAN

POND CROSS SECTION
(N.T.S.)

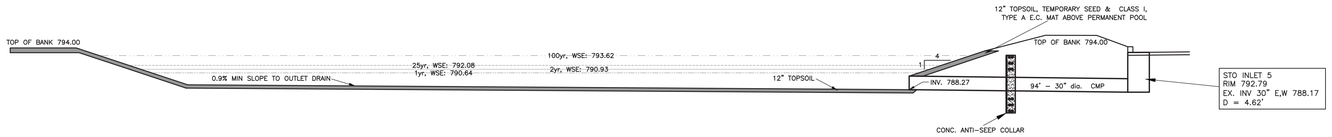

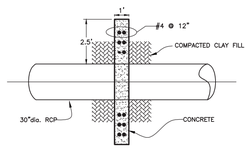

ANTI–SEEP COLLAR
(N.T.S.)

EMERGENCY/WEIR OUTLET STRUCTURE
(N.T.S.)

	Post (Prop. Control)	Post–Develop. W.S. Elev.
Q_{peak} (1yr Storm Event)	17.38 cfs	
Q_{peak} (2yr Storm Event)	18.67 cfs	
Q_{peak} (25yr Storm Event)	25.28 cfs	
Q_{peak} (100yr Storm Event)	31.47 cfs	
Detention (1yr Storm Event)	0.323 ac–ft	790.62
Detention (2yr Storm Event)	0.394 ac–ft	790.92
Detention (25yr Storm Event)	0.712 ac–ft	792.06
Detention (100yr Storm Event)	1.231 ac–ft	793.60

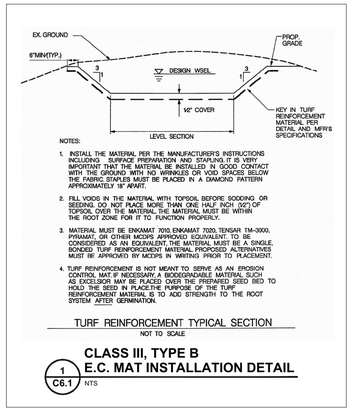

1 C6.1 **CLASS III, TYPE B E.C. MAT INSTALLATION DETAIL**
NTS

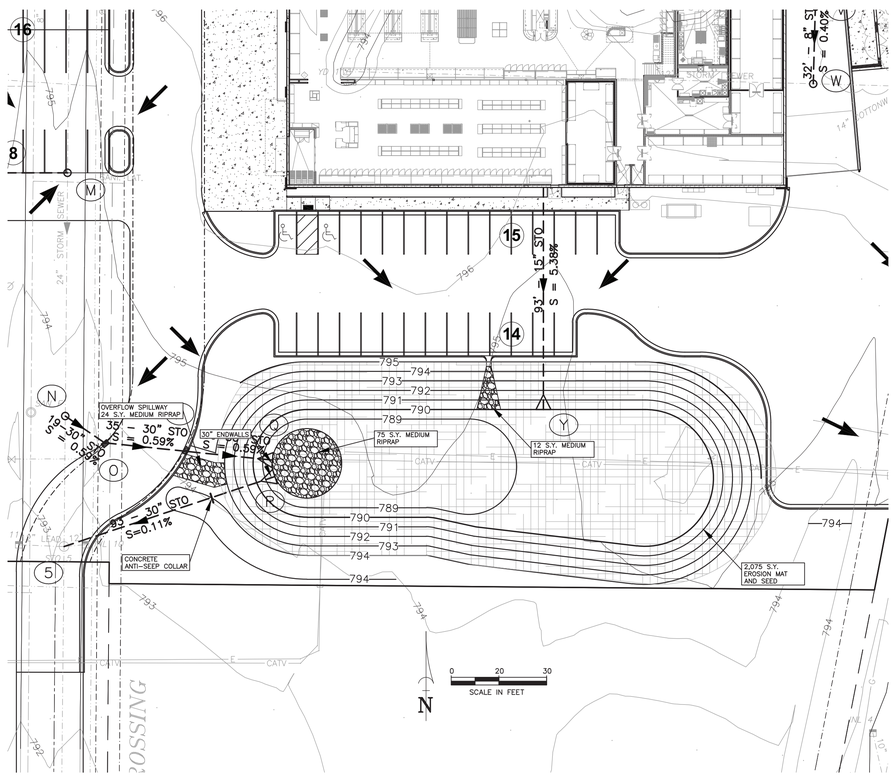

POND CONSTRUCTION

Topsoil Stripping
The contractor shall strip the area free of topsoil and stockpile at locations as indicated on the Erosion Control Plan.

Unclassified Excavation
Unclassified excavation shall include the removal and disposal of all materials encountered in the excavation for the pond other than specific materials which have been classified and bid upon as a separate bid item for this project. When excavating for the ponds, the excavation limits shall be the limits per the pond construction plans.

Fine Grading
Fine grading shall consist of shaping and compacting the total cross section and limits of the pond according to the typical cross section illustrated on the plans. Fine Grading shall include the grading of the spillway. All costs associated shall be included in the unit price bid.

Geo-textile Fabric
The geo-textile fabric for under the riprap shall consist of Type "R" porous non-woven fabric with multiple layers of randomly arranged fibers. The Engineer shall inspect fabric prior to placement of riprap and during placement of riprap. Damaged filter fabric shall be replaced at Contractor's expense.

Manufacturers
- Mirafi 140N by Mirafi, Inc.
- Typar 3401 by Dupont
- Supac 5P by Phillips Fibers Corporation
- Propex 4545 by Amoco Fabrics Company

Riprap
The Contractor shall trim and shape the bed for the fabric prior to the placement of the riprap as indicated on the plan. The riprap shall be clean washed riprap measuring 12" thick measured perpendicular to the slope. (24" total depth)

All equipment, labor, and materials used to install and maintain the riprap shall be included in the unit price bid for Medium Rip-Rap & Type R Filter Fabric, square yards.

Outlet Structure/Piping/Etc.
Construction of the Outlet Structures with trash guards, pipe, concrete apron endwalls with trash guard, and spillways shall be in accordance with the details on the plans. All costs associated with the supply, installation and construction of all items involved with the outlet structures, pipe, concrete apron endwalls, and spillways shall be included in the price bid.

Restoration
The Contractor shall seed, fertilize and mulch the pond only above the normal water surface. Restoration of the pond shall be in accordance with Section 2.5.C.2.C (Temporary Seed).

Erosion Control Vegetative Mat
The area above the normal water surface shall be matted with Class I, Type B Curlex, or equal, erosion control vegetative mats as listed in the Product Acceptability List (PAL) for Multi-Model Applications published by the Wisconsin Department of Transportation, current edition.

Topsoil
Topsoil shall conform to the requirements of the Wisconsin Department of Transportation Standard Specifications for Highway and Structure Construction, 2003 Edition, Section 625.

design matters

somerville
architects | engineers
Somerville Inc. | 2100 Riverside Drive, Green Bay, WI 54301-2330
P 920.437.8136 | F 920.437.1131 | www.somervilleinc.com

MEYER | BORGMAN | JOHNSON
STRUCTURAL DESIGN + ENGINEERING
SEE STRUCTURE.

Martenson & Eisele, Inc.
137 Main Street
Menasha, WI 54952
www.martenson-eisele.com
info@martenson-eisele.com
920.731.0381 | 800.236.0381
Environmental
Planning
Engineering
Architecture

Revisions	Description	Date
#2	All items noted for new inspection areas.	10-15-2015

"N.B. Drawing may not be reproduced without the written permission of Somerville, Inc."
"The design features of this drawing may be subjected to copyright protection."
© Somerville, Inc.

POND PLAN

NEW STORE FOR:
SKOGEN'S FESTIVAL FOODS
MENASHA, WISCONSIN

Date: 10/15/15
Project No. 6630
Sheet: C501

FESTIVAL FOODS: STANDARD DETAILS

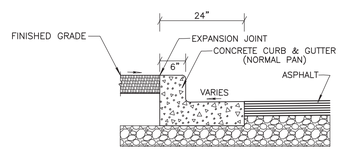

1 C601 **24" CONCRETE CURB & GUTTER**
NTS

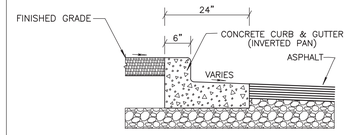

2 C601 **24" REJECT CONCRETE CURB & GUTTER**
NTS

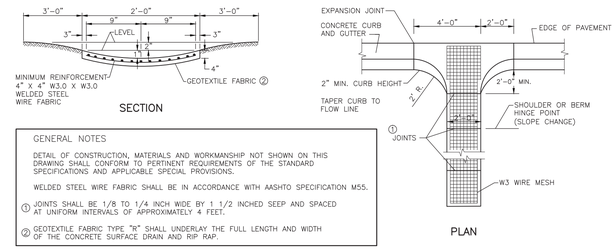

GENERAL NOTES

DETAIL OF CONSTRUCTION, MATERIALS AND WORKMANSHIP NOT SHOWN ON THIS DRAWING SHALL CONFORM TO PERTINENT REQUIREMENTS OF THE STANDARD SPECIFICATIONS AND APPLICABLE SPECIAL PROVISIONS.

WELDED STEEL WIRE FABRIC SHALL BE IN ACCORDANCE WITH AASHTO SPECIFICATION M55.

① JOINTS SHALL BE 1/8 TO 1/4 INCH WIDE BY 1 1/2 INCHED SEEP AND SPACED AT UNIFORM INTERVALS OF APPROXIMATELY 4 FEET.

② GEOTEXTILE FABRIC TYPE "R" SHALL UNDERLAY THE FULL LENGTH AND WIDTH OF THE CONCRETE SURFACE DRAIN AND RIP RAP.

3 C601 **CONCRETE FLUME**
NTS

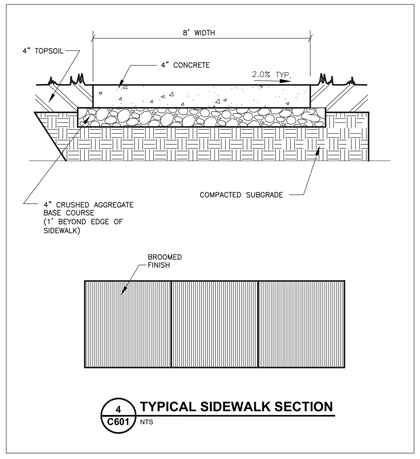

4 C601 **TYPICAL SIDEWALK SECTION**
NTS

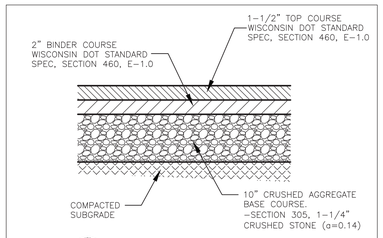

5 C601 **PARKING AREAS (LIGHT DUTY)**
NTS

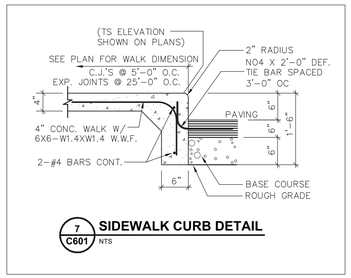

7 C601 **SIDEWALK CURB DETAIL**
NTS

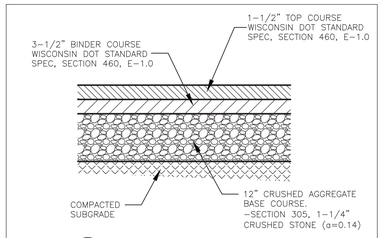

6 C601 **CIRCULATION AREAS & DRIVES (HEAVY DUTY)**
NTS

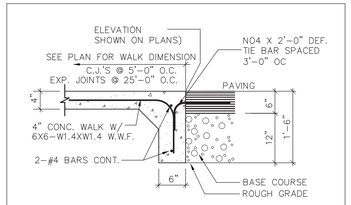

8 C601 **SIDEWALK CURB DETAIL (FLUSH)**
NTS

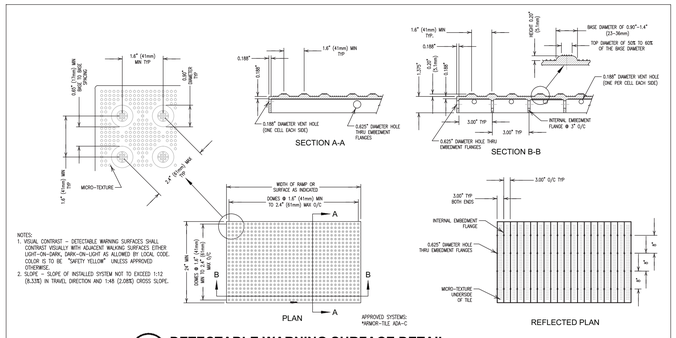

NOTES:
1. VISUAL CONTRAST - DETECTABLE WARNING SURFACES SHALL CONTRAST VISUALLY WITH ADJACENT WALKING SURFACES EITHER LIGHT-ON-DARK, DARK-ON-LIGHT AS ALLOWED BY LOCAL CODE. COLOR IS TO BE "SAFETY YELLOW" UNLESS APPROVED OTHERWISE.
2. SLOPE - SLOPE OF INSTALLED SYSTEM NOT TO EXCEED 1:12 (8.33%) IN TRAVEL DIRECTION AND 1:48 (2.08%) CROSS SLOPE.

9 C601 **DETECTABLE WARNING SURFACE DETAIL**
NTS 2.62b

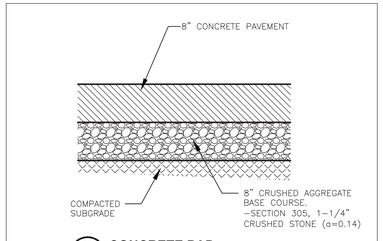

10 C601 **CONCRETE PAD**
NTS

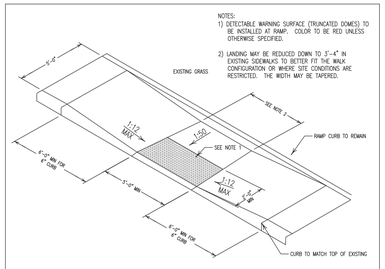

11 C601 **CONCRETE RESTORATION - WALKWAY RAMP**
NTS

design matters

somerville
architects | engineers
Somerville Inc. | 2100 Riverside Drive, Green Bay, WI 54301-2300
P 920.437.8536 | F 920.437.1131 | www.somervilleinc.com

MEYER | BORGMAN | JOHNSON
STRUCTURAL DESIGN + ENGINEERING
SEE STRUCTURE.
TEL 503.297.5025
www.mbjpc.com
ON-SITE WASTEWATER TREATMENT SYSTEMS

Martenson & Eisele, Inc.
137 Main Street
Menasha, WI 54952
www.martenson-eisele.com
info@martenson-eisele.com
920.731.0381 | 800.236.0381
Civil Engineering
Environmental
Engineering
Architecture
Planning

Revisions	Description	Date

"It is illegal to copy, reproduce or distribute this drawing without the written permission of Somerville, Inc."
"Ownership, rights of use of this drawing may be obtained by emailing Permission@somervilleinc.com"
© Somerville, Inc.

STANDARD DETAILS

NEW STORE FOR:
SKOGEN'S FESTIVAL FOODS
MENASHA, WISCONSIN

Date:
09/30/15
Project No.
6630
Sheet:
C601

FESTIVAL FOODS: STANDARD DETAILS

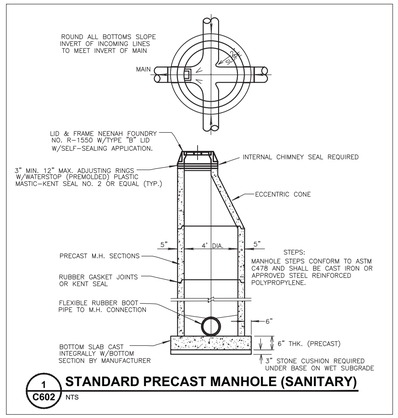

1 / C602 STANDARD PRECAST MANHOLE (SANITARY)
NTS

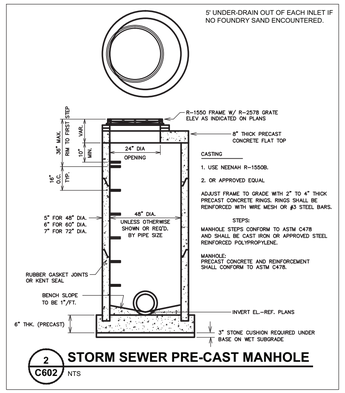

2 / C602 STORM SEWER PRE-CAST MANHOLE
NTS

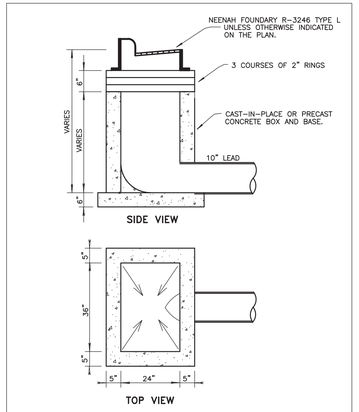

3 / C602 CURB & GUTTER INLET DETAIL
NTS

* INLET A-3 WILL CONSIST OF TWO ADJACENT INLETS WITH A 18" DIAMETER CONNECTION. THE 18" PIPE BETWEEN A-2 AND A-3 WILL CONNECT TO THE NORTHERN BOX.

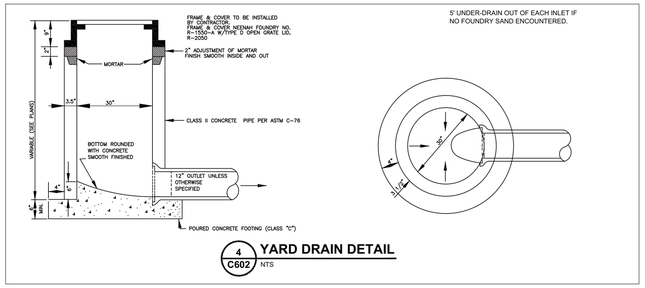

4 / C602 YARD DRAIN DETAIL
NTS

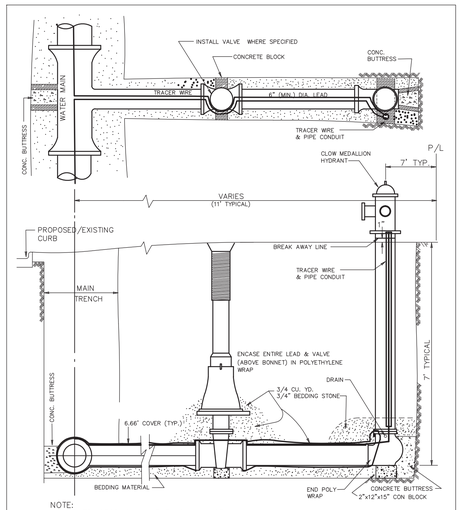

NOTE:
1.) CONTRACTOR SHALL FURNISH & INSTALL STONE, CONCRETE BLOCKING, AND TRACER WIRE CONDUIT.
2.) HYDRANTS SHALL BE CLOW MEDALLION.

5 / C602 STANDARD HYDRANT SETTING
NTS

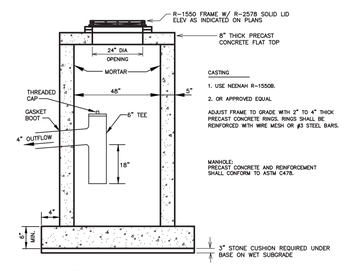

6 / C602 GREASE/OIL SEPARATOR
(SEPARATES GREASE AND OIL FROM LOADING DOCK DISCHARGE)
NTS

design matters

somerville
architects | engineers
Somerville Inc. | 2100 Riverside Drive, Green Bay, WI 54301-2330
P 920.437.8136 | F 920.437.1131 | www.somervilleinc.com

MEYER | BORGMAN | JOHNSON
STRUCTURAL DESIGN + ENGINEERING
TEL 503.297.9001 www.mbjpdx.com
ON-SITE/INFRASTRUCTURE DETAILS
SEE STRUCTURE.

Martenson & Eisele, Inc.
Planning
Environmental
Surveying
Engineering
Architecture
1377 Midway Road
Menasha, WI 54952
www.martenson-eisele.com
info@martenson-eisele.com
920.731.0381 | 800.236.0381

Revisions Description Date

This plans may not be reproduced without the written permission of Somerville, Inc.
© Somerville, Inc.
Electronic copies of this drawing may be submitted by request.
Permission@somervilleinc.com

STANDARD DETAILS

NEW STORE FOR:
SKOGEN'S FESTIVAL FOODS
MENASHA, WISCONSIN

Date:
09/30/15
Project No.
6630
Sheet:
C602

FESTIVAL FOODS: STANDARD DETAILS

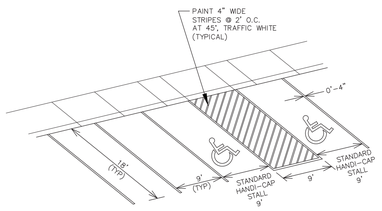

1 C603 **PARKING LOT STRIPING**
NTS

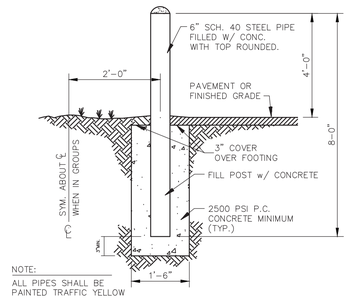

NOTE:
ALL PIPES SHALL BE PAINTED TRAFFIC YELLOW

2 C603 **BOLLARD DETAIL**
NTS

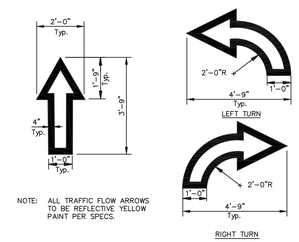

NOTE: ALL TRAFFIC FLOW ARROWS TO BE REFLECTIVE YELLOW PAINT PER SPECS.

3 C603 **TRAFFIC FLOW AREA**
NTS

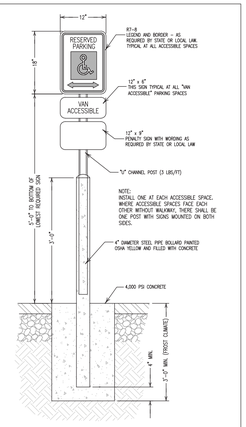

4 C603 **ACCESSIBLE SIGN DETAIL**
NTS

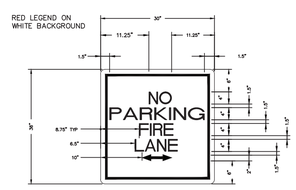

ALL SIGN LETTERS TO COMPLY WITH STANDARD ALPHABETS FOR HIGHWAY SIGNS (SERIES E 2000)

5 C603 **"NO PARKING-FIRE LANE" SIGN**
NTS

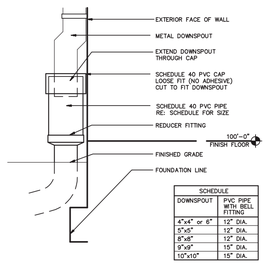

SCHEDULE	
DOWNSPOUT	PVC PIPE WITH BELL FITTING
4"x4" or 6"	12" DIA.
5"x5"	12" DIA.
8"x8"	12" DIA.
9"x9"	15" DIA.
10"x10"	15" DIA.

6 C603 **EXTERIOR DOWNSPOUT COLLECTOR**
NTS

design matters

somerville architects | engineers
Somerville Inc. | 2100 Riverside Drive, Green Bay, WI 54301-2305
P 920.437.8136 | F 920.437.1131 | www.somervilleinc.com

MEYER | BORGMAN | JOHNSON
STRUCTURAL DESIGN + ENGINEERING
www.bmjpc.com
TEL 320.251.5205
CIVIL/STRUCTURAL/MECHANICAL/ELECTRICAL/FIRE PROTECTION
SEE STRUCTURE.

Martenson & Eisele, Inc.
1377 Motor Parkway
Menasha, WI 54952
www.martenson-eisele.com
info@martenson-eisele.com
920.751.0061 | 800.236.0381
Planning
Environmental
Civil Engineering
Architecture

Revisions Description Date

N.B. Drawing from which this print is derived is the property of Somerville, Inc. Reproduction or copies of this drawing may be obtained by written permission of Somerville, Inc.
©Somerville, Inc.

STANDARD DETAILS

NEW STORE FOR:
SKOGEN'S FESTIVAL FOODS
MENASHA, WISCONSIN

Date:
09/30/15
Project No.
6630
Sheet:
C603

FESTIVAL FOODS: LANDSCAPE PLAN

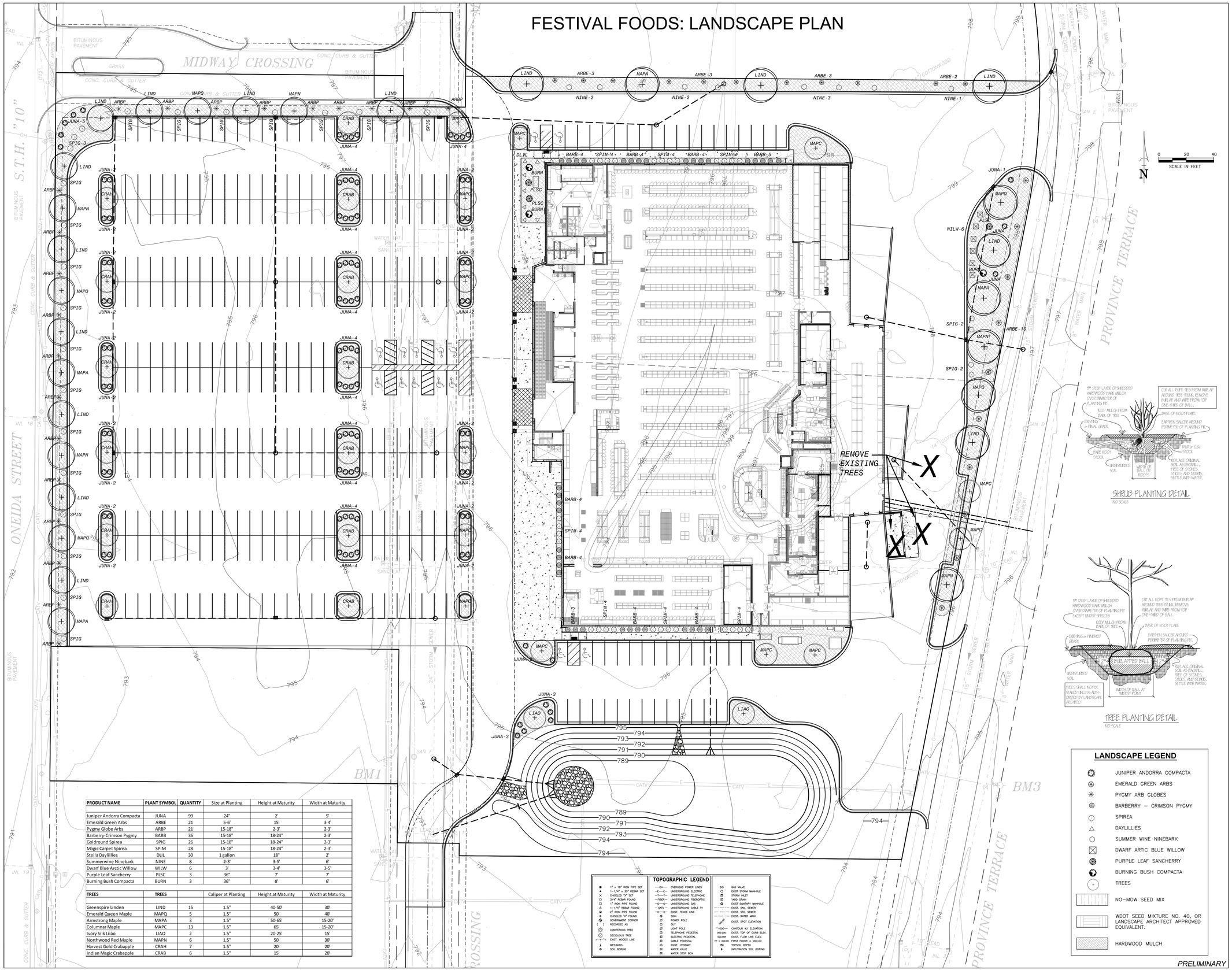

PRODUCT NAME	PLANT SYMBOL	QUANTITY	Size at Planting	Height at Maturity	Width at Maturity
Juniper Andorra Compacta	JUNA	99	24"	2'	5'
Emerald Green Arbs	ARBE	21	5-6'	15'	3-4'
Pygmy Globe Arbs	ARBP	21	15-18"	2-3'	2-3'
Barberry-Crimson Pygmy	BARB	36	15-18"	18-24"	2-3'
Goldround Spirea	SPIG	26	15-18"	18-24"	2-3'
Magic Carpet Spirea	SPIM	28	15-18"	18-24"	2-3'
Stella Daylillies	DILL	30	1 gallon	18"	2'
Summerwine Ninebark	NINE	8	2-3'	3-5'	6'
Dwarf Blue Arctic Willow	WILW	6	3'	3-4'	3-5'
Purple Leaf Sancherry	PLSC	3	36"	7'	7'
Burning Bush Compacta	BURN	3	36"	8'	6'
TREES	**TREES**		Caliper at Planting	Height at Maturity	Width at Maturity
Greenspire Linden	LIND	15	1.5"	40-50'	30'
Emerald Queen Maple	MAPQ	5	1.5"	50'	40'
Armstrong Maple	MAPA	3	1.5"	50-65'	15-20'
Columnar Maple	MAPC	13	1.5"	65'	15-20'
Ivory Silk Liiao	LIAO	2	1.5"	20-25'	15'
Northwood Red Maple	MAPN	6	1.5"	50'	30'
Harvest Gold Crabapple	CRAH	7	1.5"	20'	20'
Indian Magic Crabapple	CRAB	6	1.5"	15'	20'

TOPOGRAPHIC LEGEND

- 1" x 18" IRON PIPE SET
- 1-1/4" x 30" REBAR SET
- CHISELED "X" SET
- 3/4" REBAR FOUND
- 1" IRON PIPE FOUND
- 1-1/4" REBAR FOUND
- 2" IRON PIPE FOUND
- CHISELED "X" FOUND
- GOVERNMENT CORNER
- ( ) RECORDED AS
- CONIFEROUS TREE
- DECIDUOUS TREE
- EXIST. WOODS LINE
- WETLANDS
- SOIL BORING
- OVERHEAD POWER LINES
- UNDERGROUND ELECTRIC
- UNDERGROUND TELEPHONE
- UNDERGROUND FIBEROPTIC
- UNDERGROUND GAS
- UNDERGROUND CABLE TV
- EXIST. FENCE LINE
- SIGN
- POWER POLE
- GUY
- LIGHT POLE
- TELEPHONE PEDESTAL
- ELECTRIC PEDESTAL
- CABLE PEDESTAL
- EXIST. HYDRANT
- WATER VALVE
- WATER STOP BOX
- GAS VALVE
- EXIST STORM MANHOLE
- STORM INLET
- YARD DRAIN
- EXIST SANITARY MANHOLE
- EXIST. SAN. SEWER
- EXIST. STO. SEWER
- EXIST. WATER MAIN
- EXIST. SPOT ELEVATION
- 000.00 CONTOUR W/ ELEVATION
- 000.00hc EXIST. TOP OF CURB ELEV.
- 000.00lf EXIST. FLOW LINE ELEV.
- FF = 000.00 FIRST FLOOR = 000.00
- TOPSOIL DEPTH
- INFILTRATION SOIL BORING

SHRUB PLANTING DETAIL

NO SCALE

TREE PLANTING DETAIL

NO SCALE

LANDSCAPE LEGEND

- JUNIPER ANDORRA COMPACTA
- EMERALD GREEN ARBS
- PYGMY ARB GLOBES
- BARBERRY – CRIMSON PYGMY
- SPIREA
- DAYLILLIES
- SUMMER WINE NINEBARK
- DWARF ARTIC BLUE WILLOW
- PURPLE LEAF SANCHERRY
- BURNING BUSH COMPACTA
- TREES
- NO–MOW SEED MIX
- WDOT SEED MIXTURE NO. 40, OR LANDSCAPE ARCHITECT APPROVED EQUIVALENT.
- HARDWOOD MULCH

PRELIMINARY

design matters

somerville architects | engineers
Somerville, Inc. | 2200 Burnside Drive, Green Bay, WI 54301-2093
P 920.437.8136 | F 920.437.1131 | www.somervilleinc.com

MEYER | BORGMAN | JOHNSON
STRUCTURAL DESIGN • ENGINEERING
TEL 503.97.3000 | 503.20.0700 | 503.20.0700 | SEE STRUCTURE
www.mbjpc.com | SUITE 300 | SUITE 300 | SUITE 300

Martenson & Eisele, Inc.
1377 Motor Parkway
Menasha, WI 54952
www.martenson-eisele.com
info@martenson-eisele.com
920.731.0381 | 1.800.236.0381
Environmental
Planning
Engineering
Architecture

Revisions	Description	Date
#1	Parking spaces assigned and additional landscaping	10-6-2015

This drawing, design, and data, is the intellectual property of Somerville, Inc. Reproduction of this drawing may be made only with written permission of Somerville, Inc.

LANDSCAPE PLAN

NEW STORE FOR:
SKOGEN'S FESTIVAL FOODS
MENASHA, WISCONSIN

Date: 09/30/15
Project No. 6630
Sheet: C701

FESTIVAL FOODS: SITE LIGHTING PLAN

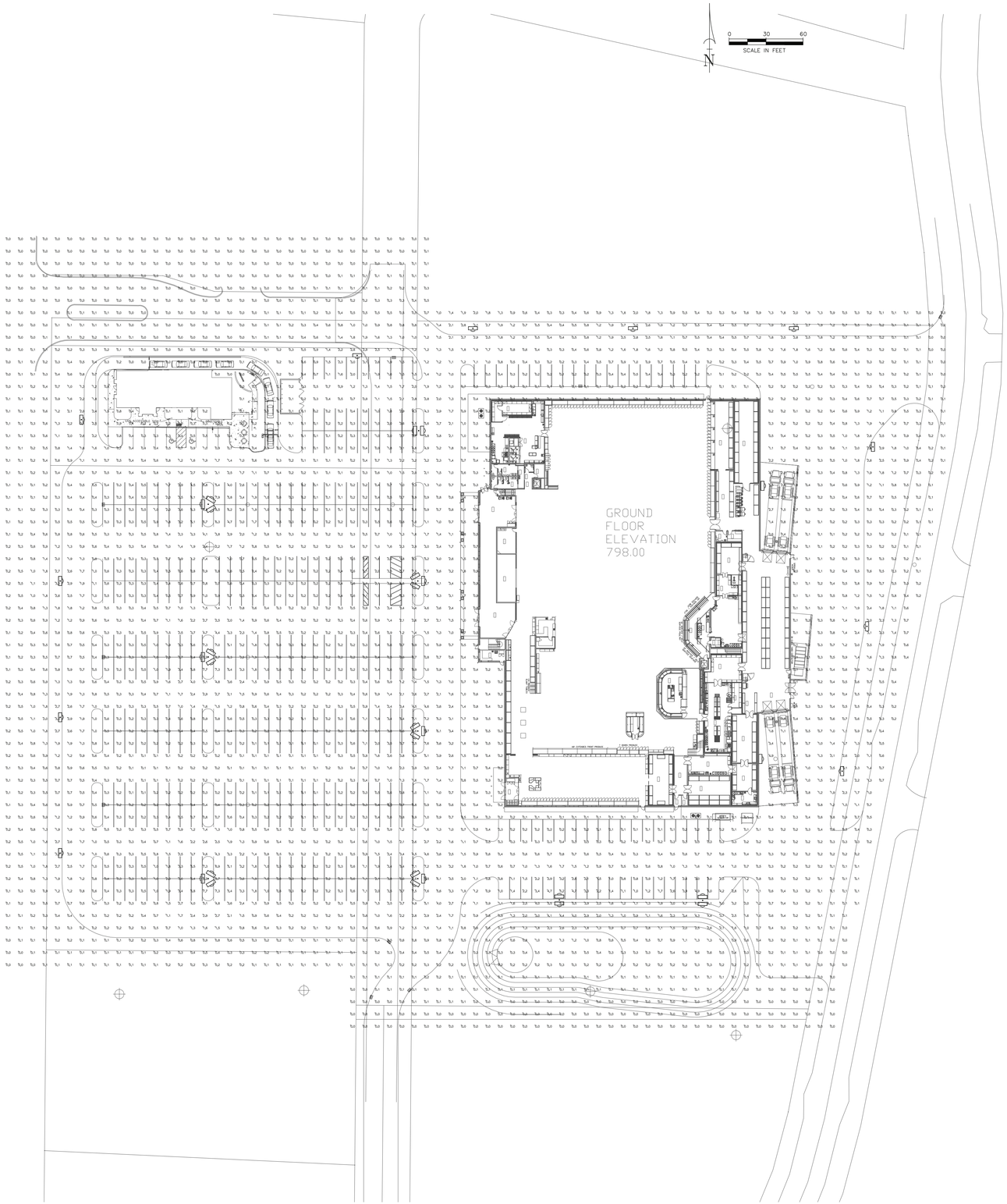

GENERAL ELECTRICAL SPECIFICATIONS:

1. THROUGHOUT SPECIFICATIONS, NOTES, OR DRAWINGS, E.G., CONTRACTOR, OR ELEC. CONTR. SHALL INDICATE ELECTRICAL CONTRACTOR.
2. ALL ELECTRICAL INSTALLATIONS SHALL COMPLY WITH ALL PERTINENT CODES. ALL MATERIALS & EQUIPMENT SHALL BE NEW. EC SHALL BE RESPONSIBLE FOR INSTALLING A COMPLETE & ACCURATE ELECTRICAL SYSTEM.
3. ALL CIRCUITRY SHALL BE ROUTED IN CONDUIT, MINIMUM ¾". RIGID STEEL AND SCH 40 PVC PIPE SHALL BE USED IN ALL INSTALLATIONS. RIGID STEEL ELBOWS AND PVC FITTINGS SHALL BE STANDARD. FITTINGS SHALL BE THREADED RIGID STEEL AND GLUED PVC. ALL WIRING SHALL BE COPPER AND SHALL BE #12 THW MINIMUM. COLOR CODING SHALL BE USED FOR ALL WIRE.
4. LIGHT FIXTURES INDICATED IN FIXTURE SCHEDULE ARE FIXTURES TO BE INCLUDED IN EC BASE BID. NO SUBSTITUTIONS SHALL BE ACCEPTED PRIOR TO AWARDING OF ELECTRICAL CONTRACT. ALL LIGHT FIXTURES SHALL BE MOUNTED ON STRAIGHT SQUARE STEEL 50'-0" POLES.
5. SHOULD THE ELEC. CONTR. IN GOING OVER THE ELECTRICAL PLANS AND SPECIFICATIONS RECOGNIZE ANY POINTS WHICH TO THEM SEEM TO BE INSUFFICIENTLY OR IMPROPERLY CARED FOR, OR ANY NECESSARY ITEMS OR EQUIPMENT OMITTED TO THE EXTENT OF JEOPARDIZING THE SYSTEMS INTEGRITY, OR THE GUARANTEE WHICH THE E.C. SHALL BE PROVIDING, IT IS THE RESPONSIBILITY OF THE E.C. TO STATE SUCH CONDITIONS TO THE ELECTRICAL DESIGNER IN WRITING IMMEDIATELY SO AS TO CORRECT SUCH ITEMS DURING THE BID PROCESS. IF THIS CONDITION IS NOT COMPLIED WITH, IT WILL BE ASSUMED THAT THE SYSTEMS COVERED ON THESE DOCUMENTS ARE SATISFACTORY TO THE E.C. & THEY SHALL BE HELD BOUND TO THEIR GUARANTEE.

STATISTICS

Description	Symbol	Avg	Max	Min	Max/Min	Avg/Min
Calc Zone #2	+	0.9 fc	8.9 fc	0.0 fc	N / A	N / A

LUMINAIRE SCHEDULE

Symbol	Label	Qty	Catalog Number	Description	Lamp	File	Lumens	LLF	Watts
	A	12	EXT56RBL5K	400W TSHO C LAMP AT.5x18.125x3.125TPOLE MNT AREA LUMINAIRE SYMMETRIC MIRO4 REFLECTOR w/CLEAR MAXROLON LENS GE BALLAST #GE454MVPS90-G & GE254MVPS95-F WATTSK348		EXT56 (12-20-10 15800).ies	1860	1.00	96
	B	3	EXT56RBL5K	400W TSHO C LAMP AT.5x18.125x3.125TPOLE MNT AREA LUMINAIRE SYMMETRIC MIRO4 REFLECTOR w/CLEAR MAXROLON LENS GE BALLAST #GE454MVPS90-G & GE254MVPS95-F WATTSK348		EXT56 (12-20-10 15800).ies	1860	1.00	192
	C	6	EXT56RBL5K	400W TSHO C LAMP AT.5x18.125x3.125TPOLE MNT AREA LUMINAIRE SYMMETRIC MIRO4 REFLECTOR w/CLEAR MAXROLON LENS GE BALLAST #GE454MVPS90-G & GE254MVPS95-F WATTSK348		EXT56 (12-20-10 15800).ies	1860	1.00	288
	D	2	EXT56RBL5K	400W TSHO C LAMP AT.5x18.125x3.125TPOLE MNT AREA LUMINAIRE SYMMETRIC MIRO4 REFLECTOR w/CLEAR MAXROLON LENS GE BALLAST #GE454MVPS90-G & GE254MVPS95-F WATTSK348		EXT56 (12-20-10 15800).ies	1860	1.00	96

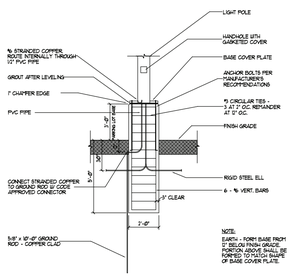

PARKING LOT POLE BASE DETAIL

PRELIMINARY

design matters

somerville
architects engineers
Somerville Inc. | 2100 Riverside Drive, Green Bay, WI 54301-2390
P 920.437.8183 F 920.437.1131 | www.somervilleinc.com

MEYER BORGMAN JOHNSON
STRUCTURAL DESIGN + ENGINEERING
SEE STRUCTURE.

Martenson & Eisele, Inc.
Planning
Environmental
Surveying
Engineering
Architecture
1377 Midway Road
Menasha, WI 54952
www.martenson-eisele.com
920.731.0381 | 800.236.0381
920.731.0381 | 800.236.0381

Revisions Description Date

This drawing may not be reproduced without the written permission of Somerville Inc.
Permission to copy or use this drawing may be obtained by contacting Somerville Inc. 920.437.8183 ©2015

SITE LIGHTING PLAN

NEW STORE FOR:
SKOGEN'S FESTIVAL FOODS
MENASHA, WISCONSIN

Date: 10/15/15
Project No. 6630
Sheet: E1.1

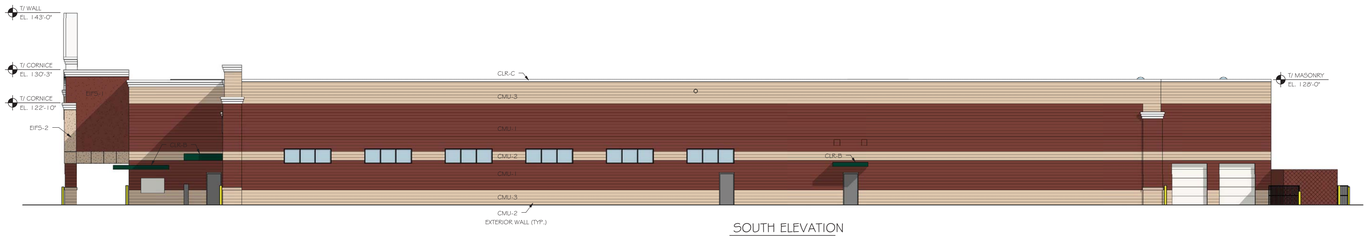

SOUTH ELEVATION
SCALE: 3/32" = 1'-0"

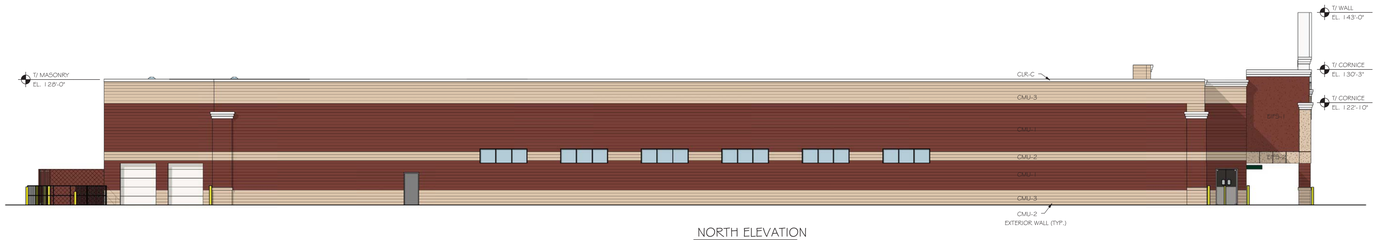

NORTH ELEVATION
SCALE: 3/32" = 1'-0"

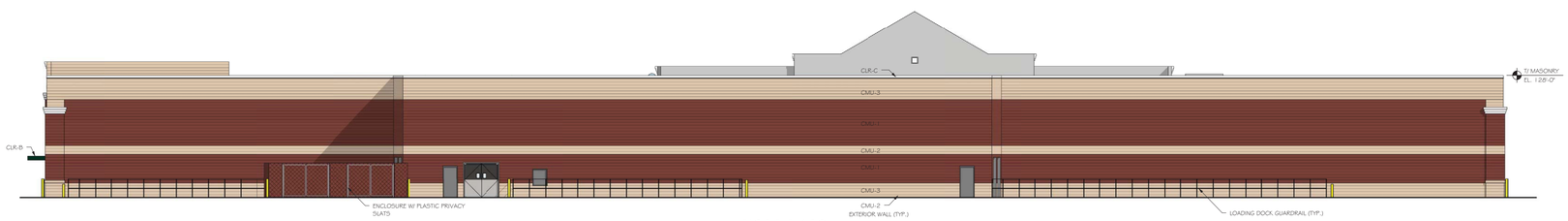

EAST ELEVATION
SCALE: 3/32" = 1'-0"

WEST ELEVATION
SCALE: 3/32" = 1'-0"

EXTERIOR MATERIAL LEGEND

NOTE:
THE MATERIALS LISTED BELOW ARE THE BASIS OF DESIGN.
SUBCONTRACTORS MAY SUBMIT ALTERNATE MATERIALS. HOWEVER,
IT IS THE ARCHITECT'S OPTION TO REJECT OR APPROVE ANY OF THE
ALTERNATES SUBMITTED.

MARK	DESCRIPTION
	ALUMINUM STOREFRONT KAWNEER TRIFAB VERSAGLAZE 451 T OR EQUAL 2" x 4 1/2" MINIMUM DIMENSION (PROVIDE CALCULATIONS FOR EACH OPENING) ANODIZED ALUMINUM 1" THERMALLY BROKEN LOW E GLAZING DARK BRONZE
CMU-1	SPLIT-FACE CMU COUNTY MATERIALS CORPORATION OR EQUAL SPLIT-FACE RUNNING BOND 1 COAT OF BLOCK FILLER (PRIMER) 2 COATS OF ELASTOMERIC PAINT - SW CUSTOM "AWNING RED"
CMU-2	SMOOTH-FACE CMU COUNTY MATERIALS CORPORATION OR EQUAL SMOOTH-FACE RUNNING BOND 1 COAT OF BLOCK FILLER (PRIMER) 2 COATS OF ELASTOMERIC PAINT - SW CUSTOM "COLONY BUFF"
CMU-3	SPLIT-FACE CMU COUNTY MATERIALS CORPORATION OR EQUAL SPLIT-FACE RUNNING BOND 1 COAT OF BLOCK FILLER (PRIMER) 2 COATS OF ELASTOMERIC PAINT - SW CUSTOM "COLONY BUFF"
CMU-4	SMOOTH-FACE CMU COUNTY MATERIALS CORPORATION OR EQUAL SMOOTH-FACE RUNNING BOND 1 COAT OF BLOCK FILLER (PRIMER) 2 COATS OF ELASTOMERIC PAINT - SW CUSTOM "AWNING RED"
EIFS-1	EXTERIOR INSULATION FINISH SYSTEM (EIFS) DRYVIT OR EQUAL OUTSULATION PLUS 2" WATER MANAGED PEBBLE TEXTURE "20700" BY STO
EIFS-2	EXTERIOR INSULATION FINISH SYSTEM (EIFS) DRYVIT OR EQUAL OUTSULATION PLUS 2" WATER MANAGED PEBBLE TEXTURE "CANVASS" BY PAREX
CLR-B	DARK GREEN METAL COPING AND CANOPY PAINT FACTORY FINISH UNACLAD "HARTFORD GREEN"
CLR-C	WHITE METAL COPING / CORNICE / ROOFING / FLASHING / VENTED SOFFIT FACTORY FINISH UNACLAD "BONE WHITE"
CLR-D	BLUE METAL PANELS FIELD PAINTED SHERWIN WILLIAMS, DTM ACRYLIC PAINT, PANTONE 3005C - SEMI GLOSS
CLR-E	GREEN METAL PANELS FIELD PAINTED SHERWIN WILLIAMS, DTM ACRYLIC PAINT, PANTONE 361C - SEMI GLOSS
CLR-F	YELLOW METAL PANELS FIELD PAINTED SHERWIN WILLIAMS, DTM ACRYLIC PAINT, PANTONE 108C - SEMI GLOSS
CLR-G	ORANGE METAL PANELS FIELD PAINTED SHERWIN WILLIAMS, DTM ACRYLIC PAINT, PANTONE 1375C - SEMI GLOSS
CLR-H	RED METAL PANELS FIELD PAINTED SHERWIN WILLIAMS, DTM ACRYLIC PAINT, PANTONE 485C - SEMI GLOSS
PCS-1	PRE-CAST STONE SILL PRAIRIE STONE OR EQUAL GROUNDFACE ALABASTER

design matters

somerville
architects | engineers
Somerville Inc. | 3700 Riverside Drive, Green Bay, WI 54301-2390
P 920.437.8136 | F 920.437.1131 | www.somervilleinc.com

MEYER | BORGMAN | JOHNSON
STRUCTURAL DESIGN + ENGINEERING
TEL 920.391.3000 | www.mbjinc.com
CO-DESIGN BREAKOUT
SEE STRUCTURE
DETAILS & SHEETS

Revisions:	Description	Date

This drawing is one of the instruments of service for the design and construction of Somerville Inc. Permission to reuse or alter this drawing may be obtained by contacting Somerville Inc. Copyright © Somerville, Inc. 2015

NEW STORE FOR:
SKOGEN'S FESTIVAL FOODS
MENASHA, WISCONSIN

Date:
10/XX/15
Project No.
6630
Sheet
A301a

PRELIMINARY
9/28/2015 8:46:15 AM