A NEW BUILDING FOR:

BOYS & GIRLS CLUB OF MENASHA

MENASHA, WISCONSIN

MATERIAL INDEX-PLANS,SECTIONS

- EARTH
- COMPACTED FILL
- GRAVEL FILL
- CERAMIC TILE
- POURED CONCRETE
- CONCRETE BLOCK
- CONCRETE BLOCK FILLED
- FACE BRICK
- STONE
- ROUGH LUMBER
- PLYWOOD
- FINISHED LUMBER
- RIGID INSULATION
- BATT INSULATION
- DRYWALL
- STEEL
- PRECAST CONCRETE
- ACOUSTIC TILE
- BITUMINOUS PAVING
- EXISTING WALL TO BE REMOVED
- EXISTING WALL TO REMAIN
- CONSTRUCT NEW WALL

REFERENCE SYMBOLS

SECTION CUT SYMBOL (WALL SECTIONS)

1 / A101
- SECTION DESIGNATION (NUMBER FOR CROSS SECTION & LETTER FOR WALL SECTION)
- DRAWING NUMBER ON WHICH SECTION APPEARS

PLAN DETAIL / ENLARGED PLAN SYMBOL

1 / A101
- DETAIL NUMBER
- DRAWING NUMBER ON WHICH DETAIL APPEARS

DETAIL CUT SYMBOL

1 / A101
- DETAIL NUMBER
- DRAWING NUMBER ON WHICH DETAIL APPEARS

Name / Elevation — ELEVATION MARK - NEW

Name / Elevation — ELEVATION MARK - EXISTING

DRAWING SYMBOLS

- 101 — DOOR TAG
- 1 — REVISION NUMBER
- W1 — WINDOW TAG
- C — COLUMN LINE DESIGNATION- NEW
- A1 — WALL TYPE
- UP — STAIRWAY DIRECTION INDICATION
- ? — KEYNOTE MARK - ACCESSORIES
- ? — KEYNOTE MARK - DEMOLITION NOTES
- ? — KEYNOTE MARK - PLAN NOTES
- 10'-0" A.F.F. — SPOT ELEVATION MARKER

PROJECT DATA

GOVERNING AUTHORITY - WISCONSIN DEPT. OF SAFETY AND PROFESSIONAL SERVICES	
REFERENCED CODE	INTERNATIONAL BUILDING CODE 2009
CLASS OF CONSTRUCTION	II-B
OCCUPANCY CLASSIFICATION	ASSEMBLY (A-3)
LOCAL ZONING AUTHORITY	CITY OF MENASHA
BUILDING SPRINKLED	YES
BUILDING AREA:	
FIRST FLOOR:	25,454 S.F.
SECOND FLOOR:	8,210 S.F.
CANOPY:	2,670 S.F.
TOTAL BUILDING SQ. FT.:	**36,334 S.F.**

PROJECT LOCATION

600 RACINE STREET (AT SIXTH STREET)
MENASHA, WISCONSIN

★ INDICATES PROJECT LOCATION

N

VICINITY PLAN

NO SCALE

NOTE:
THE INTENT AND MEANING OF THE CONSTRUCTION DOCUMENTS IS THAT THE CONTRACTOR UNDER THE TERMS OF THE CONTRACT SHALL TAKE ALL ACTIONS NECESSARY AND REQUIRED TO PROVIDE ALL LABOR, MATERIALS, SUPPLIES, EQUIPMENT, TRANSPORTATION, FACILITIES AND APPURTENANCES WHICH ARE INDICATED OR REASONABLY IMPLIED BY EACH DRAWING AND EACH SECTION OF THE SPECIFICATIONS, ALL OF WHICH ARE COLLECTIVELY NECESSARY AND REQUIRED FOR THE CONSTRUCTION OF THE DESCRIBED STRUCTURES AND FACILITIES.

NOTE:
ALL TRADES SHALL CROSS REFERENCE ALL CONSTRUCTION DOCUMENTS FOR COORDINATION AND SCOPE OF WORK

SHEET INDEX

CS-S COVER SHEET - SITE

CIVIL
C1 ABBREVIATIONS, SYMBOLS & NOTES
C2 EXISTING CONDITIONS & DEMOLITION
C3 PROPOSED DRAINAGE PLAN
C4 EROSION & SEDIMENT CONTROL PLAN
C5 BIOFILTER DETAILS
C6 EROSION & SEDIMENT CONTROL DETAILS
C7 MISCELLANEOUS DETAILS

ARCHITECTURAL
A-0.1 SITE PLAN
A-0.2 SITE DETAILS
L-0.1 LANDSCAPE PLAN
L-0.2 LANDSCAPE NOTES & DETAILS
ES101 SITE LIGHTING PLAN/SITE LIGHTING PHOTOMETRICS
A-1.1 FIRST FLOOR PLAN
A-1.2 SECOND FLOOR PLAN
A-4.1 EXTERIOR ELEVATIONS
A-4.2 EXTERIOR ELEVATIONS

PROPERTY OWNER

OWNER
BOYS & GIRLS CLUB OF THE FOX VALLEY
160 S. BADGER AVENUE
APPLETON, WI 54914
PH (920)731-0555
CONTACT: GREG LEMKE-ROCHON

CONSULTANTS

ARCHITECTURAL
GRIES ARCHITECTURAL GROUP, INC.
500 N. COMMERCIAL STREET
NEENAH, WI 54956
PH (920)722-2445 FX (920)722-6605
CONTACT: STEVE BORSECNIK, AIA, LEED AP

CIVIL
McMAHNON
1445 McMAHON DRIVE/ P.O. BOX 1025
NEENAH, WI 54957-1025
PH (920)751-4200 FX (920)751-4284
CONTACT: JENNIFER L. SCHAFF, P.E.

Gries
Architectural Group Inc.
500 North Commercial Street
Neenah, Wisconsin 54956
Phone: 920-722-2445 Fax: 920-722-6605
www.griesarchitectural.com

©Copyright. This Print/Computer File Is The Exclusive Property Of Gries Architectural Group, Inc. Use Only For Purpose Which Loaned. Copying Or Reproducing Is Prohibited. Return Upon Request.

A NEW BUILDING FOR:
BOYS & GIRLS CLUB OF MENASHA
MENASHA, WISCONSIN

SITE PLAN REVIEW SUBMITTAL 03-10-2015

date: 03-10-2015
job: 14-009
d. by: SMB
rev.: 03/10/15

CS-S

Z:\2014\14-009 Boys and Girls Club- Menasha\REVIT\14-009 Boys and Girls Club.rvt
3/10/2015 5:05:31 PM

STANDARD ABBREVIATIONS

AC	ACRE
AGG	AGGREGATE
AH	AHEAD
ASPH	ASPHALT PAVEMENT
AVG	AVERAGE
B-B	BACK TO BACK
BEG	BEGIN
BIT	BITUMINOUS
BK	BACK
B/L	BASE LINE
BLDG	BUILDING
BM	BENCH MARK
BOC	BACK OF CURB
BRG	BEARING
C-C	CENTER TO CENTER
CY	CUBIC YARD
C&G	CURB AND GUTTER
CB	CATCH BASIN
CE	COMMERCIAL ENTRANCE
CHD	CHORD
C/L	CENTER LINE
CL	CLASS (FOR CONC PIPE)
CMP	CORRUGATED METAL PIPE
CO	CLEAN OUT
CONC	CONCRETE
CORR	CORRUGATED
CP	CONTROL POINT
CR	CRUSHED
CS	CURB STOP
CSW	CONCRETE SIDEWALK
CTH	COUNTY TRUNK HIGHWAY
CULV	CULVERT
D	DEPTH OR DELTA
DI	DUCTILE IRON
DIA	DIAMETER
DIS	DISCHARGE
EA	EACH
EB	EASTBOUND
EBS	EXCAVATION BELOW SUBGRADE
EG	EDGE OF GRAVEL
ELEV	ELEVATION
ELEC	ELECTRIC
EMB	EMBANKMENT
EMAT	EROSION MAT
ENT	ENTRANCE
EOR	END OF RADIUS
EP	EDGE OF PAVEMENT
EXC	EXCAVATION
EX	EXISTING
EW	ENDWALL
F-F	FACE TO FACE
FDN	FOUNDATION
FE	FIELD ENTRANCE
FERT	FERTILIZER
FG	FINISHED GRADE
F/L	FLOW LINE
FT	FOOT
FTG	FOOTING
GRAV	GRAVEL
GN	GRID NORTH
GV	GAS VALVE
HDPE	HIGH DENSITY POLYETHYLENE
HE	HIGHWAY EASEMENT
HMA	HOT MIX ASPHALT
HP	HIGH POINT
HT	HEIGHT
HYD	HYDRANT
ID	INSIDE DIAMETER
IN	INCH
INL	INLET
INV	INVERT
IP	IRON PIPE
JCT	JUNCTION
LB	POUND
LF	LINEAR FOOT
LP	LIGHT POLE
LT	LEFT
LVC	LENGTH OF VERTICAL CURVE
MAINT	MAINTENANCE
MAT'L	MATERIAL
MAX	MAXIMUM
MIN	MINIMUM
MH	MANHOLE
MP	MILE POST
NB	NORTHBOUND
NO	NUMBER
NOR	NORMAL
OD	OUTSIDE DIAMETER
OBLIT	OBLITERATE
PAV'T	PAVEMENT
PC	POINT OF CURVATURE
PCC	PORTLAND CEMENT CONCRETE OR POINT OF COMPOUND CURVATURE
PE	PRIVATE ENTRANCE
PED	PEDESTAL
PGL	PROFILE GRADE LINE
PI	POINT OF INTERSECTION
P/L	PROPERTY LINE
PLE	PERMANENT LIMITED EASEMENT
PP	POWER POLE
PRC	POINT OF REVERSE CURVATURE
PROP	PROPOSED
PSD	PASSING SIGHT DISTANCE
PSI	POUNDS PER SQUARE INCH
PT	POINT OF TANGENCY
PVC	POLYVINYL CHLORIDE OR POINT OF VERTICAL CURVATURE
PVI	POINT OF VERTICAL INTERSECTION
PVT	POINT OF VERTICAL TANGENCY
R	RADIUS
RCP	REINFORCED CONCRETE PIPE
RD	ROAD
REBAR	REINFORCEMENT ROD
REM	REMOVE
RECON	RECONSTRUCT
REQ'D	REQUIRED
R/L	REFERENCE LINE
RP	RADIUS POINT
RR	RAILROAD
RT	RIGHT
R/W	RIGHT-OF-WAY
SB	SOUTHBOUND
SE	SUPERELEVATION
SF	SQUARE FEET
SI	SLOPE INTERCEPT
STH	STATE TRUNK HIGHWAY
SY	SQUARE YARD
SALV	SALVAGED
SAN	SANITARY
SEC	SECTION
SHLDR	SHOULDER
S/L	SURVEY LINE
SQ	SQUARE
STA	STATION
STD	STANDARD
STO	STORM
SW	SIDEWALK
TC	TOP OF CURB
TEL	TELEPHONE
TEMP	TEMPORARY
TLE	TEMPORARY LIMITED EASEMENT
TV	TELEVISION
TYP	TYPICAL
UG	UNDERGROUND
USH	U.S. HIGHWAY
VAR	VARIES
VC	VERTICAL CURVE
VERT	VERTICAL
WB	WESTBOUND
WM	WATER MAIN
WV	WATER VALVE

GENERAL NOTES

1) THE UTILITIES SHOWN ARE INDICATED IN ACCORDANCE WITH AVAILABLE RECORDS. THE CONTRACTOR SHALL BE RESPONSIBLE FOR OBTAINING EXACT LOCATIONS AND ELEVATIONS OF ALL UTILITIES, INCLUDING ANY PRIVATE UTILITIES, FROM THE OWNERS OF THE RESPECTIVE UTILITIES. ALL UTILITIES SHALL BE NOTIFIED 72 HRS. PRIOR TO EXCAVATION.

2) EXISTING STREET RIGHT-OF-WAY AND INTERSECTION PROPERTY LINES ARE ESTABLISHED FROM FIELD LOCATED SURVEY MONUMENTATION, PREVIOUS SURVEYS, PLATS AND CURRENT PROPERTY DEEDS.

3) NO TREES OR SHRUBS ARE TO BE REMOVED WITHOUT PRIOR APPROVAL FROM THE OWNER.

4) A SAWED JOINT IS REQUIRED WHERE NEW HMA PAVEMENT MATCHES EXISTING ASPHALTIC CONCRETE SURFACE.

5) ALL CURB RADII SHOWN ON THE PLAN SHEETS ARE TO THE BACK OF CURB UNLESS OTHERWISE NOTED.

6) DIMENSIONS ARE TO THE BACK OF CURB UNLESS OTHERWISE NOTED.

STANDARD SYMBOLS

- 2" IRON PIPE FOUND
- 1 1/4" REBAR FOUND
- 1 1/4" x 30" IRON REBAR WEIGHING 4.30 LB/LF SET
- 1" (1.315 OD) IRON PIPE FOUND
- 1" IRON PIPE SET
- 3/4" IRON REBAR FOUND
- 3/4" IRON PIPE FOUND
- 3/4"x 24" IRON REBAR WEIGHING 1.5 LB/LF SET
- MAG NAIL FOUND
- MAG NAIL SET
- GEAR NAIL SET
- RAILROAD SPIKE FOUND
- RAILROAD SPIKE SET
- CHISEL CROSS FOUND
- CHISEL CROSS SET
- COUNTY MONUMENT
- CONCRETE MONUMENT FOUND
- CONTROL POINT HORIZONTAL
- CONTROL POINT VERTICAL
- SB or MW — SOIL BORING or MONITORING WELL
- POWER POLE
- POWER POLE W/GUY WIRE
- TELEPHONE OR TELEVISION PEDESTAL
- MB — MAILBOX
- SIGN
- RAILROAD CROSS BUCK
- RAILROAD GATE ARM
- RAILROAD TRACKS
- LIGHT POLE
- WOOD POLE
- TRAFFIC SIGNAL
- TRAFFIC SIGNAL MAST ARM
- CONIFEROUS TREE
- DECIDUOUS TREE
- TREE OR BRUSH LINE
- BED ROCK (IN PROFILE VIEW)
- HANDICAPPED PARKING STALL
- ×750.34 — EXISTING SPOT ELEVATION
- × 750.00 — PROPOSED SPOT ELEVATION
- DRAINAGE HIGH POINT
- DRAINAGE DIRECTION
- EXISTING MANHOLE
- PROPOSED MANHOLE
- EXISTING INLET
- PROPOSED INLET
- EXISTING YARD DRAIN
- PROPOSED YARD DRAIN
- CO — EXISTING CLEAN OUT
- CO — PROPOSED CLEAN OUT
- EXISTING DOWNSPOUT
- PROPOSED DOWNSPOUT
- EXISTING WATER VALVE
- PROPOSED WATER VALVE
- CS — EXISTING CURB STOP
- CS — PROPOSED CURB STOP
- EXISTING FIRE HYDRANT
- PROPOSED FIRE HYDRANT
- PROPOSED WATER FITTING
- PROPOSED WATER REDUCER
- PROPOSED ENDCAP
- GV — GAS VALVE

- T — TELEPHONE CABLE - BURIED
- E — ELECTRIC CABLE - BURIED
- OHU — UTILITIES - OVERHEAD
- FO — FIBER OPTIC CABLE - BURIED
- G — GAS MAIN
- TV — CABLE TELEVISION - BURIED
- DITCH LINE
- STREET C/L OR R/L
- PROPERTY LINE
- RIGHT-OF-WAY LINE
- SECTION LINE
- 746 — EXISTING CONTOURS
- 746 — PROPOSED CONTOURS
- SAN — EXISTING SANITARY SEWER
- SAN — PROPOSED SANITARY SEWER
- WM — EXISTING WATER MAIN
- WM — PROPOSED WATER MAIN
- STO — EXISTING STORM SEWER
- STO — PROPOSED STORM SEWER
- EXISTING CURB & GUTTER
- PROPOSED CURB & GUTTER
- PROPOSED REJECT CURB & GUTTER
- EXISTING CULVERT WITH END SECTIONS
- PROPOSED CULVERT WITH END SECTIONS
- BUILDING OUTLINE
- FENCE LINE
- SAW CUT REQ'D
- SILT FENCE
- GUARD RAIL
- DITCH CHECK
- INLET PROTECTION
- TRACKING PAD
- TURBIDITY BARRIER OR SHEET PILING
- SANDBAG COFFERDAM
- SLOPE INTERCEPT
- LIMITS OF DISTURBANCE
- EROSION MAT
- RIP-RAP (SIZE AS SPECIFIED)
- TURF REINFORCEMENT MAT (TRM)
- VEGETATED BUFFER
- DELINEATED WETLANDS
- EXISTING PAVEMENT
- PROPOSED PAVEMENT
- 6" CONCRETE SIDEWALK / DRIVEWAY
- PROPOSED GRAVEL

McMAHON
ENGINEERS ARCHITECTS
1445 McMAHON DRIVE NEENAH, WI 54956
Mailing: P.O.BOX 1025 NEENAH, WI 54957-1025
Tel: (920) 751-4200 Fax: (920) 751-4284
www.mcmgrp.com

McMahon provides this drawing and data, regardless of form, as instruments of service. All rights including copyrights are retained by McMahon. The client and/or recipient agrees to the fullest extent permitted by law to indemnify and hold McMahon harmless for any reuse of or changes made to the original drawing or data without prior written consent by McMahon.

NO.	DATE	REVISION

BOYS AND GIRLS CLUB
CITY OF MENASHA
ABBREVIATIONS, SYMBOLS & NOTES

DESIGNED	DRAWN
JLS	KRH

PROJECT NO. M0032-940326
DATE JULY 2014
SHEET NO. C1

W:\PROJECTS\M0032\940326\00\Acad\C1 ABBREVIATIONS, SYMBOLS & NOTES.dwg, C1 ABBREVIATIONS SYMBOLS & NOTES, Plot Date: 8/6/2014 7:13:46 AM, khegner, 1:2
khegner, W:\PROJECTS\M0032\940326\00\Acad\C1 ABBREVIATIONS, SYMBOLS & NOTES.dwg, c1 abbreviations symbols & notes, Plot Date: 8/6/2014 7:13 AM, xrefs:none

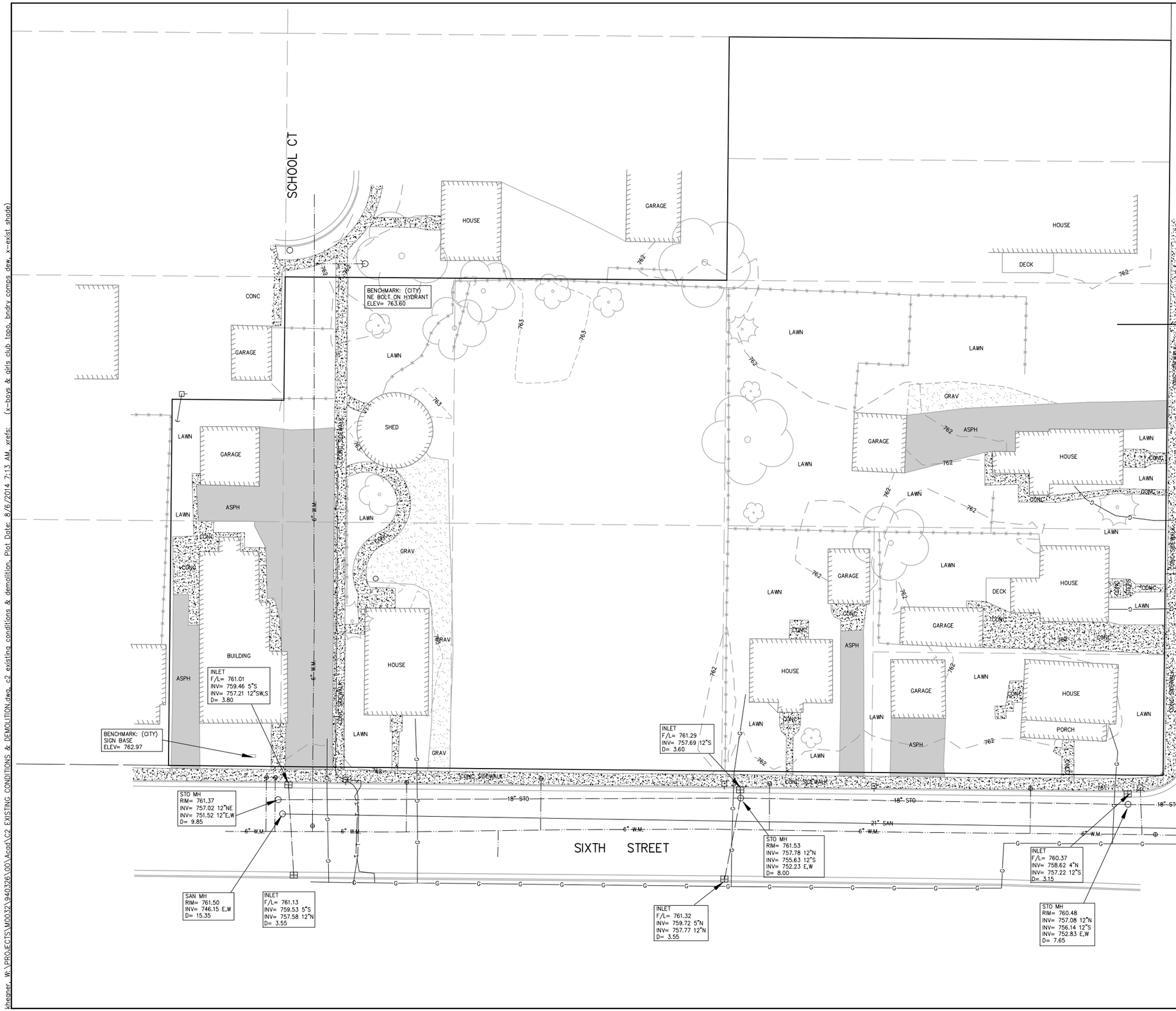

Notes for Existing Conditions & Demolition:

1. Apply for and obtain all demolition permits required. Follow all State and Local requirements.
2. Demolish all existing site structures, pavements (including driveway aprons), and underground utilities.
3. Demolish all existing water laterals to the site. Corporation shall be removed at the main and a sleeve installed per Menasha Utilities requirements.
4. Demolish all existing sanitary laterals extending from Racine Street to the site that are not being utilized for the Boys and Girls Club building. Demolish all lateral piping up to but not including the PVC lateral connection to the main. Construct a glued on cap or any other watertight abandonment approved by the City.
5. Demolish all existing sanitary laterals on Sixth Street. Demolish all lateral piping up to but not including the sanitary lateral riser. If at the time of exposing the existing riser, it is observed that the riser is allowing any clearwater infiltration; the City of Menasha shall be notified to see how the riser can be abandoned and eliminate the infiltration. In the City of Menasha the property owner owns the lateral from the house to the sanitary sewer main. If it is a tapped connection the property owner owns the tapped connection as well. If it is factory connection the City owns the connection. In the case of a riser; the property owner owns the sanitary lateral from the house to the bend of the riser. The City owns the riser from the sanitary sewer main to the bend of the riser so any work on that section of the riser would be City responsibility. Contractor shall complete work that is considered the property owner's responsibility
6. Replace curb and gutter, sidewalk panels etc. as necessary to restore site to conditions acceptable to the owner.
7. The City of Menasha requires slurry backfill at any excavation four feet or deeper on both Racine Street and Sixth Street.

McMAHON
ENGINEERS ARCHITECTS
1445 McMAHON DRIVE NEENAH, WI 54956
Mailing: P.O.BOX 1025 NEENAH, WI 54957-1025
Tel: (920) 751-4200 Fax: (920) 751-4284
www.mcmgrp.com

McMahon provides this drawing and data, regardless of form, as instruments of service. All rights including copyrights are retained by McMahon. The client and/or recipient agrees to the fullest extent permitted by law to indemnify and hold McMahon harmless for any reuse of or changes made to the original drawing or data without prior written consent by McMahon.

NO.	DATE	REVISION
1	8/4/14	Notes

BOYS AND GIRLS CLUB
CITY OF MENASHA
EXISTING CONDITIONS & DEMOLITION

DESIGNED	DRAWN
JLS	KRH

PROJECT NO. M0032–940326

DATE JULY 2014

SHEET NO. C2

W:\PROJECTS\M0032\940326\00\Acad\C2 EXISTING CONDITIONS & DEMOLITION.dwg, C2 EXISTING CONDITIONS & DEMOLITION, 8/6/2014 7:13:52 AM, khegner, 1:2
khegner, W:\PROJECTS\M0032\940326\00\Acad\C2 EXISTING CONDITIONS & DEMOLITION.dwg, c2 existing conditions & demolition, Plot Date: 8/6/2014 7:13 AM, xrefs: (x-boys & girls club topo, bndry comps dew, x-exist shade)

SITEWORK SPECIFICATIONS	
SITEWORK AND GENERAL EARTHWORK	WDOT STD SPECIFICATIONS SECTION 205, 207, 211
SITEWORK CONCRETE CONSTRUCTION	WDOT STD SPECIFICATIONS SECTION 415, 601, 602
UTILITY CONSTRUCTION	STANDARD SPECIFICATIONS FOR SEWER AND WATER CONSTRUCTION IN WISCONSIN, CURRENT
ASPHALTIC CONCRETE PAVEMENT	WDOT STD SPECIFICATIONS SECTION 450, 455, 460, 465
BASE COURSE-CRUSHED LIMESTONE	WDOT STD SPECIFICATIONS SECTION 301
STORM PIPING	ASTM D-3034, SDR 35
PRECAST CONCRETE STORM STRUCTURES	ASTM C-478
SANITARY SEWER PIPING	ASTM D-3034, SDR 35
PAVEMENT PAINT MARKING	WDOT STD SPECIFICATIONS 646

NOTE: WORK IN ROAD RIGHT-OF-WAY MUST FOLLOW CITY OF MENASHA REQUIREMENTS/STANDARD SPECIFICATIONS.

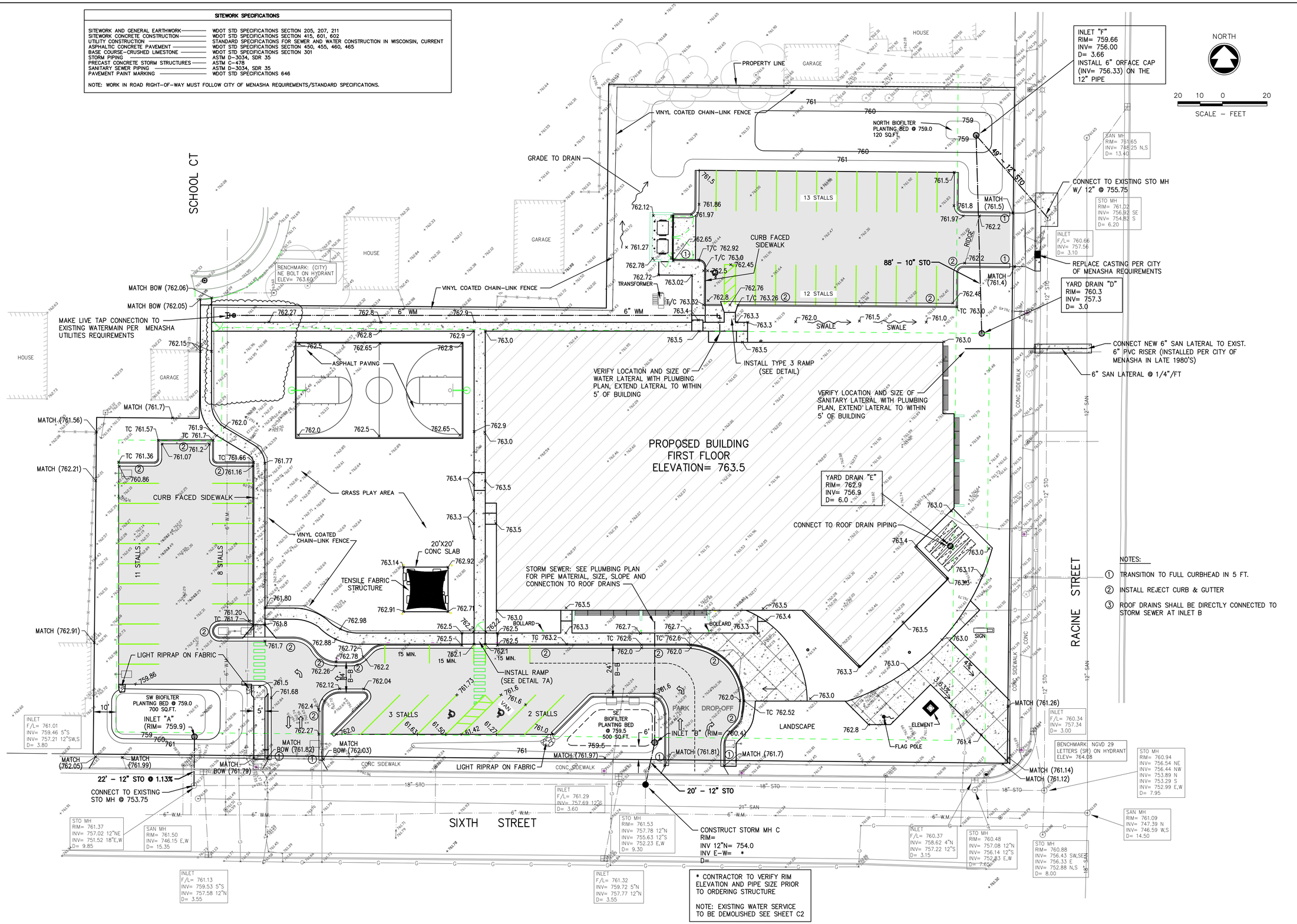

McMAHON
ENGINEERS ARCHITECTS
1445 McMAHON DRIVE NEENAH, WI 54956
Mailing: P.O.BOX 1025 NEENAH, WI 54957-1025
Tel: (920) 751-4200 Fax: (920) 751-4284
www.mcmgrp.com

McMahon provides this drawing and data, regardless of form or content, as instruments of service. All rights including copyrights are retained by McMahon. The client and/or recipient agrees to the fullest extent permitted by law to indemnify and hold McMahon harmless for any reuse of or changes made to the original drawing or data without prior written consent by McMahon.

NO.	DATE	REVISION
1	8/2014	SPECS / MISC.
2	10/2014	ADDITIONAL DOORS/UTILITY NOTES.
3	12/2014	PARKING LOT ADDITION
4	1/2015	RAMP DETAIL 7A
5	3/2015	REMOVE SCHOOL CT DUMPSTER ENCLOSURE

BOYS AND GIRLS CLUB
CITY OF MENASHA
PROPOSED DRAINAGE PLAN

NOTES:

1. TRANSITION TO FULL CURBHEAD IN 5 FT.
2. INSTALL REJECT CURB & GUTTER
3. ROOF DRAINS SHALL BE DIRECTLY CONNECTED TO STORM SEWER AT INLET B

DESIGNED	DRAWN
JLS	KRH

PROJECT NO. M0032-940326

DATE 10-01-2014

SHEET NO. C3

Schaff, W:\PROJECTS\M0032\940326\00\Acad\C3 PROPOSED DRAINAGE PLAN.dwg, c3 proposed drainage plan, Plot Date: 3/2/2015 5:32 PM, xrefs: (x-boys & girls club topo, x-exist shade, bndry comps dew, x-boys & girls club proposed, 070114 boysandgirlsclub-sheet-0-1, 101)

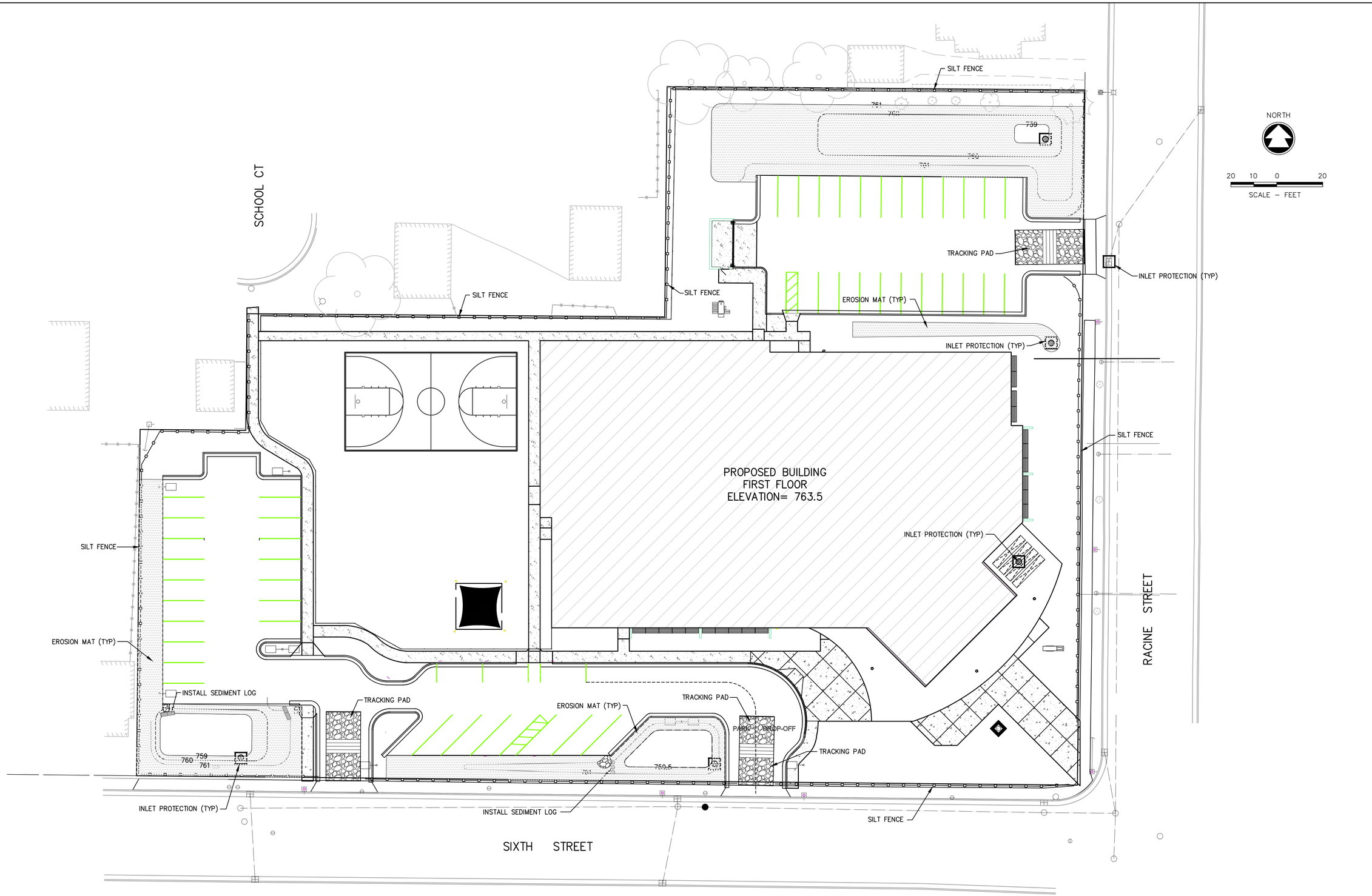

McMAHON
ENGINEERS ARCHITECTS
1445 McMAHON DRIVE NEENAH, WI 54956
Mailing: P.O.BOX 1025 NEENAH, WI 54957-1025
Tel: (920) 751-4200 Fax: (920) 751-4284
www.mcmgrp.com

McMahon provides this drawing and data, regardless of form or medium, as instruments of service. All rights including copyrights are retained by McMahon. The client and/or recipient agrees to the fullest extent permitted by law to indemnify and hold McMahon harmless for any reuse of or changes made to the original drawing or data without prior written consent by McMahon.

NO.	DATE	REVISION
1	8/2014	REMOVED TRACKING PAD
2	12/2014	PARKING LOT ADDITION
3	1/2015	REMOVE SCHOOL CT DUMPSTER ENCLOSURE

BOYS AND GIRLS CLUB
CITY OF MENASHA
EROSION & SEDIMENT CONTROL PLAN

DESIGNED	DRAWN
JLS	KRH

PROJECT NO.
M0032-940326

DATE
10-01-2014

SHEET NO.
C4

Schaff, W:\PROJECTS\M0032\940326\00\Acad\C4 EROSION & SEDIMENT CONTROL PLAN.dwg, c4 erosion & sediment control plan, Plot Date: 3/2/2015 5:33 PM, xrefs: (x-boys & girls club proposed 070114 boysandgirlsclub-sheet-a-0-1, bndry comps dew, x-boys & girls club topo

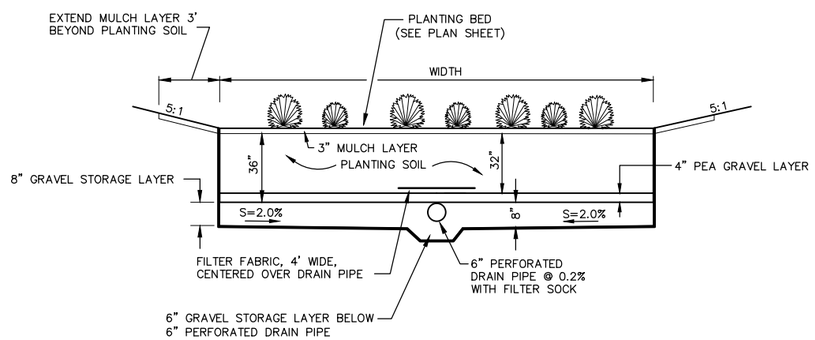

BIO-FILTRATION DETAIL A-A

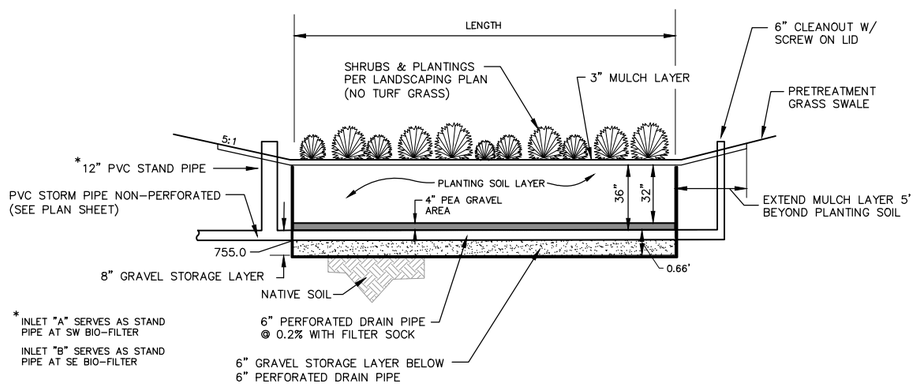

BIO-FILTRATION DETAIL B-B

BIOFILTRATION SPECIFICATIONS

MULCH LAYER
SHREDDED HARDWOOD MULCH OR CHIPS SHALL BE PLACED ON THE SURFACE OF THE PLANTING SOIL TO A DEPTH OF 2 TO 3-INCHES. MULCH SHALL BE FREE OF FOREIGN MATERIAL, INCLUDING OTHER PLANT MATERIAL. MULCH SHALL BE AGED A MINIMUM OF 12 MONTHS.

PLANTING SOIL LAYER
PLANTING SOIL SHALL BE FREE OF ROCKS, STUMPS, ROOTS, BRUSH, OR OTHER MATERIAL OVER 1-INCH IN DIAMETER. NO OTHER MATERIAL SHALL BE MIXED WITH THE PLANTING SOIL THAT MAY BE HARMFUL TO PLANT GROWTH, INFILTRATION RATES, OR PROVE A HINDRANCE TO PLANTING AND MAINTENANCE. PLANTING SOIL SHALL HAVE ADEQUATE NUTRIENTS TO MEET PLANT GROWTH REQUIREMENTS. PLANTING SOIL SHALL HAVE A pH BETWEEN 5.5 AND 6.5. PLANTING SOIL SHALL BE UNIFORMLY MIXED AND CONSIST OF 70-85% SILICA SAND (QUARTZ SAND), AND 15-30% COMPOST.

1) SILICA SAND (QUARTZ SAND) COMPONENT SHALL BE USDA CLASSIFIED COARSE SAND TEXTURE WITH 0.02 TO 0.04 INCH DIAMETER. SAND COMPONENT SHALL BE PRE-WASHED TO REMOVE CLAY AND SILT PARTICLES AND THEN WELL-DRAINED OR DRIED PRIOR TO MIXING. CALCIUM CARBONATED, DOLOMITIC SAND, AND OTHER SUBSTITUTIONS ARE NOT ALLOWED.
2) TOPSOIL COMPONENT SHALL BE USDA CLASSIFIED LOAM TEXTURE. TEXTURE CLASS SHALL BE VERIFIED BY LABORATORY ANALYSIS OR LICENSED PROFESSIONAL.
3) COMPOST COMPONENT SHALL CONTAIN LESS THAN 1% COMBINED GLASS, METAL, AND PLASTIC. COMPOST SHALL BE RESISTANT TO FURTHER DECOMPOSITION AND FREE OF COMPOUNDS IN CONCENTRATIONS TOXIC TO PLANT GROWTH. COMPOST SHALL COMPLY WITH US EPA 503 REGULATIONS FOR CLASS A BIOSOLIDS AND CONTAIN NEGLIGIBLE CONCENTRATIONS OF BOTH HEAVY METALS AND OTHER CHEMICAL CONTAMINANTS. COMPOST SHALL ALSO SATISFY THE FOLLOWING SPECIFICATIONS:

Particle size	98% pass 0.75 inch screen
Organic matter	40% minimum
Ash content	60% maximum
Carbon to Nitrogen (C:N) Ratio	10-20:1
pH range	6.0 - 8.0
Soluble salts	10 dS m-1 electrical conductivity maximum
Moisture content	35% - 50% by weight
Compost Maturity Index	6-8
Seedling germination test	88% minimum
Pathogens and noxious seeds	minimized

GRAVEL STORAGE LAYER
GRAVEL SHALL MEET COURSE AGGREGATE # 2 AND OTHER SPECIFICATIONS OF WISCONSIN STANDARDS AND SPECIFICATIONS FOR HIGHWAY AND STRUCTURE CONSTRUCTION, SECTION 501.2.5, 2003 EDITION OR EQUIVALENT AS APPROVED BY ADMINISTERING AUTHORITY. GRAVEL SHALL BE DOUBLE WASHED.
NOTE: INADEQUATE WASHING WILL RESULT IN CLOGGING THE DEVICE.

PERFORATED UNDERDRAIN
UNDERDRAIN SHALL BE A 6-INCH DIAMETER CORRUGATED POLYETHYLENE PIPE WITH CIRCULAR OR SLOTTED PERFORATIONS. AT A MINIMUM, 4 TO 10 INCH DIAMETER PIPES SHALL HAVE 1.0 SQUARE INCH OF PERFORATED OPEN AREA PER LINEAR FOOT OF PIPE LENGTH, 12
TO 18 INCH DIAMETER PIPES SHALL HAVE 1.5 SQUARE INCHES OF PERFORATED OPEN AREA PER LINEAR FOOT OF PIPE LENGTH, AND 18 INCH DIAMETER OR LARGER PIPES SHALL HAVE 2.0 SQUARE INCHES OF PERFORATED OPEN AREA PER LINEAR FOOT OF PIPE LENGTH. CIRCULAR PERFORATIONS SHALL NOT EXCEED 0.19 INCHES FOR 4 TO 10 INCH DIAMETER PIPES OR 0.38 INCHES FOR PIPES GREATER THAN 10 INCH DIAMETER. THE WIDTH OF SLOT PERFORATIONS SHALL NOT EXCEED 0.13 INCHES. THE UNDERDRAIN PIPE SHALL SATISFY SECTION 612.2.5, STATE OF WISCONSIN STANDARD SPECIFICATIONS FOR HIGHWAY AND STRUCTURE CONSTRUCTION, 2003 EDITION.

FILTER FABRIC SHALL NOT EXTEND LATERALLY FROM EITHER SIDE OF UNDERDRAIN PIPE FOR MORE THAN 2 FEET. FILTER FABRIC SHALL SATISFY SECTION 645.2.4, SCHEDULE TEST B, STATE OF WISCONSIN STANDARD SPECIFICATIONS FOR HIGHWAY AND STRUCTURE CONSTRUCTION, 2003 EDITION.

A MINIMUM 6-INCH DIAMETER VERTICAL CLEAN-OUT SHALL BE CONNECTED TO THE UPSTREAM END OF THE UNDERDRAINS. CLEAN OUT SHALL BE RIGID, NON-PERFORATED PVC PIPE WITH A REMOVABLE, WATERTIGHT CAP THAT IS FLUSH WITH THE FINISHED GROUND SURFACE.

CONSTRUCTION
CONTRACTOR SHALL SUBMIT MATERIAL CERTIFICATIONS FOR REVIEW AND APPROVAL PRIOR TO INSTALLATION. CERTIFICATIONS SHALL STATE THAT MATERIALS SATISFY SPECIFICATIONS.

RUNOFF FROM ALL UPSLOPE DISTURBED/PERVIOUS AREAS SHALL BE DIVERTED AWAY FROM THE BIOFILTRATION DEVICE UNTIL A PERMANENT PERENNIAL VEGETATIVE COVER IS ESTABLISHED WITH A UNIFORM DENSITY OF AT LEAST 70%. SEDIMENT LADEN RUNOFF WILL PREMATURELY CLOG THE BIOFILTRATION DEVICE.

CONSTRUCTION SHALL BE SUSPENDED DURING PERIODS OF RAINFALL OR SNOWMELT. CONSTRUCTION SHALL REMAIN SUSPENDED IF PONDED WATER OR RESIDUAL SOIL MOISTURE CONTRIBUTES TO SOIL SMEARING, CLUMPING, OR OTHER FORMS OF COMPACTION.

COMPACTION REMEDIATION: IF COMPACTION OCCURS AT THE BOTTOM OF THE DEVICE THE SOIL SHALL BE REFRACTURED TO A DEPTH OF AT LEAST 12". IF SMEARING OCCURS, THE SMEARED AREAS OF THE INTERFACE SHALL BE CORRECTED BY RAKING OR ROTO-TILLING.

CONSTRUCTION EQUIPMENT AND VEHICLE TRAFFIC SHALL NOT DRIVE OVER BIOFILTRATION AREA AT ANY TIME.

THE PLANTING SOIL LAYER AND SAND STORAGE LAYER SHALL BE PLACED IN 12-INCH LIFTS MAXIMUM. COMPACTION SHALL BE MINIMIZED. COMPACTION WILL SIGNIFICANTLY CONTRIBUTE TO BIOFILTRATION DEVICE FAILURE. GRADE EACH LAYER WITH HAND TOOLS, EXCAVATION HOES, MARSH EQUIPMENT, WIDE-TRACK LOADERS, OR LIGHT EQUIPMENT WITH TURF-TYPE TIRES. DO NOT USE HEAVY EQUIPMENT WITH NARROW TRACKS, NARROW TIRES, RUBBER TIRES WITH LUGS, OR HIGH-PRESSURE TIRES. STEPS MAY BE TAKEN TO INDUCE MILD SETTLING OF THE SAND STORAGE LAYER AND PLANTING SOIL LAYER AS NEEDED TO PREPARE A STABLE PLANTING BED. VIBRATING PLATE-STYLE COMPACTORS SHALL NOT BE USED.
ENTIRE PLANTING BED SHALL BE MULCHED TO A UNIFORM DEPTH OF 2 TO 3-INCHES PRIOR TO PLANTING VEGETATION TO HELP PREVENT COMPACTION OF PLANTING SOIL LAYER DURING PLANTING PROCESS. MULCH SHALL BE PUSHED ASIDE FOR INDIVIDUAL PLANT PLACEMENT.

PLANTS SHALL BE KEPT MOIST DURING TRANSPORT AND ON-SITE STORAGE. PLANTS SHALL BE FERTILIZED AND WATERED AS APPROPRIATE TO MAXIMIZE PLANT GROWTH AND SURVIVAL. PLANTS MUST BE WELL ESTABLISHED BEFORE THE ONSET OF COLD WEATHER. CONTRACTOR SHALL PROVIDE A 2-YEAR WARRANTY FOR ALL INSTALLED PLANTS, SHRUBS, AND TREES.

McMAHON
ENGINEERS ARCHITECTS
1445 McMAHON DRIVE NEENAH, WI 54956
Mailing: P.O.BOX 1025 NEENAH, WI 54957-1025
Tel: (920) 751-4200 Fax: (920) 751-4284
www.mcmgrp.com

McMahon provides this drawing and data, regardless of form, as instruments of service. All rights including copyrights are retained by McMahon. The client and/or recipient agrees to the fullest extent permitted by law to indemnify and hold McMahon harmless for any reuse of or changes made to the original drawing or data without prior written consent by McMahon.

NO.	DATE	REVISION

BOYS AND GIRLS CLUB
CITY OF MENASHA
BIOFILTER DETAILS

DESIGNED	DRAWN
JLS	KRH

PROJECT NO. M0032-940326
DATE JULY 2014
SHEET NO. C5

W:\PROJECTS\M0032\940326\00\Acad\C5 BIOFILTER DETAILS.dwg, C5 BIOFILTER DETAILS, 8/6/2014 7:14:15 AM, khegner, 1:2
khegner, W:\PROJECTS\M0032\940326\00\Acad\C5 BIOFILTER DETAILS.dwg, c5 biofilter details, Plot Date: 8/6/2014 7:14 AM, xrefs:none

EROSION & SEDIMENT CONTROL PLAN

BEST MANAGEMENT PRACTICES:

THE CONTRACTOR IS RESPONSIBLE FOR FURNISHING, INSTALLING, MAINTAINING AND REMOVING BEST MANAGEMENT PRACTICES IN ACCORDANCE WITH WISCONSIN DEPARTMENT OF NATURAL RESOURCES (DNR) TECHNICAL STANDARDS. THESE STANDARDS MAY BE FOUND ON THE DNR WEBSITE AT http://www.dnr.wi.gov/runoff/stormwater/techstds.htm. RIP-RAP SHALL BE IN ACCORDANCE WITH SECTION 606, WIS-DOT STANDARD SPECIFICATIONS FOR HIGHWAY AND STRUCTURE CONSTRUCTION, LATEST EDITION, UNTIL TECHNICAL STANDARD 1065 IS COMPLETED BY THE DNR. THE MINIMUM BEST MANAGEMENT PRACTICES SPECIFIED FOR THIS PROJECT ARE AS FOLLOWS:

[ ] LAND APPLICATION OF POLYACRYLAMIDE (1050)
[ ] WATER APPLICATION OF POLYMERS (1051)
[X] NON-CHANNEL EROSION MAT (1052)
[ ] CHANNEL EROSION MAT (1053)
[ ] VEGETATIVE BUFFER (1054)
[ ] SEDIMENT BALE BARRIER (1055)
[X] SILT FENCE (1056)
[X] TRACKING PAD & TIRE WASHING (1057)
[X] MULCHING (1058)
[X] SEEDING (1059)
[X] STORM DRAIN INLET PROTECTION (1060)
[X] DE-WATERING (1061)
[ ] DITCH CHECK (1062)
[ ] SEDIMENT TRAP (1063)
[ ] SEDIMENT BASIN (1064)
[ ] RIP-RAP (1065)
[ ] CONSTRUCTION DIVERSION (1066)
[ ] GRADING PRACTICES (1067)
[X] DUST CONTROL (1068)
[ ] TURBIDITY BARRIER (1069)
[ ] SILT CURTAIN (1070)
[ ] MANUFACTURED PERIMETER PRODUCTS (1071)

THE CONTRACTOR SHALL COORDINATE CONSTRUCTION ACTIVITIES AND IMPLEMENT BEST MANAGEMENT PRACTICES TO PREVENT OR REDUCE ALL OF THE FOLLOWING:

A. DEPOSITION OR TRACKING OF SOIL ONTO STREETS BY VEHICLES.
B. DISCHARGE OF SEDIMENT INTO STORM WATER INLETS.
C. DISCHARGE OF SEDIMENT INTO ADJACENT STREAMS, RIVERS, LAKES AND WETLANDS.
D. DISCHARGE OF SEDIMENT FROM DITCHES AND STORM SEWERS THAT FLOW OFFSITE.
E. DISCHARGE OF SEDIMENT FROM DEWATERING ACTIVITIES.
F. DISCHARGE OF SEDIMENT FROM SOIL STOCKPILES EXISTING FOR 7 DAYS OR MORE.
G. DISCHARGE OF SEDIMENT FROM EROSIVE OUTLET FLOWS.
H. TRANSPORT OF CHEMICALS, CEMENT AND BUILDING MATERIALS BY RUNOFF.
I. TRANSPORT OF UNTREATED VEHICLE AND WHEEL WASH WATER BY RUNOFF.

THE CONTRACTOR SHALL IMPLEMENT THE FOLLOWING PREVENTATIVE MEASURES:

A. PRESERVE EXISTING VEGETATION WHENEVER POSSIBLE.
B. MINIMIZE SOIL COMPACTION AND PRESERVE TOPSOIL.
C. MINIMIZE LAND DISTURBANCES ON SLOPES OF 20% OR MORE.
D. MINIMIZE THE AMOUNT OF SOIL EXPOSED AT ANY ONE TIME.
E. DIVERT CLEAR WATER AWAY FROM EXPOSED SOILS.
F. TEMPORARILY STABILIZE EXPOSED SOILS THAT WILL NOT BE ACTIVE FOR 14 DAYS OR MORE. USE MULCHING, SEEDING, POLYACRYLAMIDE OR GRAVELING TO STABILIZE.
G. PERMANENTLY STABILIZE EXPOSED SOILS AS SOON AS POSSIBLE.
H. CONTRACTOR SHALL EDUCATE ITS EMPLOYEES AND SUBCONTRACTORS ABOUT PROPER SPILL PREVENTION AND RESPONSE PROCEDURES. IF A SPILL OCCURS, THE CONTRACTOR SHALL EVACUATE THE AREA AND IMMEDIATELY NOTIFY THE LOCAL MUNICIPALITY, FIRE DEPARTMENT OR 911 EMERGENCY SYSTEM. IF NO FIRE, EXPLOSION OR LIFE / HEALTH SAFETY HAZARD EXISTS, THE NEXT STEP IS TO CONTAIN THE SPILL AND PERFORM CLEANUP. USE DRY CLEANUP METHODS, NOT WET.

THE CONTRACTOR IS RESPONSIBLE FOR REPAIRING OR REPLACING BEST MANAGEMENT PRACTICES DESTROYED AS A RESULT OF CONSTRUCTION ACTIVITIES BY THE END OF THE WORK DAY. THE CONTRACTOR IS RESPONSIBLE FOR REPLACING BEST MANAGEMENT PRACTICES TEMPORARILY REMOVED FOR CONSTRUCTION ACTIVITY AS SOON AS THOSE ACTIVITIES ARE COMPLETED. THE CONTRACTOR IS RESPONSIBLE FOR REMOVING AND DISPOSING OF TEMPORARY BEST MANAGEMENT PRACTICES AFTER CONSTRUCTION IS COMPLETE AND PERMANENT VEGETATION IS ESTABLISHED.

INSPECTION & MAINTENANCE:

THE CONTRACTOR IS RESPONSIBLE FOR INSPECTING BEST MANAGEMENT PRACTICES WEEKLY, AND WITHIN 24 HOURS FOLLOWING A RAINFALL OF 0.5 INCHES OR GREATER. WRITTEN DOCUMENTATION OF EACH INSPECTION SHALL BE KEPT AT THE CONSTRUCTION SITE AND SHALL INCLUDE THE FOLLOWING INFORMATION: DATE, TIME, AND LOCATION OF INSPECTION; NAME OF INDIVIDUAL WHO PERFORMED THE INSPECTION; AN ASSESSMENT OF THE CONDITION OF BEST MANAGEMENT PRACTICES; A DESCRIPTION OF ANY BEST MANAGEMENT PRACTICE IMPLEMENTATION AND MAINTENANCE PERFORMED; AND A DESCRIPTION OF THE PRESENT PHASE OF CONSTRUCTION. THE CONTRACTOR IS RESPONSIBLE FOR MAINTAINING, REPAIRING, OR REPLACING BEST MANAGEMENT PRACTICES AS NECESSARY WITHIN 24 HOURS OF AN INSPECTION OR NOTIFICATION. THE CONTRACTOR IS RESPONSIBLE FOR INSPECTING, MAINTAINING, REPAIRING, OR REPLACING BEST MANAGEMENT PRACTICES UNTIL ALL LAND DISTURBING CONSTRUCTION ACTIVITY IS COMPLETED AND A UNIFORM PERENNIAL VEGETATIVE COVER IS ESTABLISHED WITH A DENSITY OF AT LEAST 70%.

THE CONTRACTOR IS RESPONSIBLE FOR POSTING THE PERMIT IN A CONSPICUOUS LOCATION ON THE CONSTRUCTION SITE. THE CONTRACTOR IS RESPONSIBLE FOR KEEPING A COPY OF THE APPROVED REPORTS, PLANS, AMENDMENTS, INSPECTION REPORTS, AND PERMITS AT THE CONSTRUCTION SITE AT ALL TIMES UNTIL ALL LAND DISTURBING CONSTRUCTION ACTIVITY IS COMPLETED AND A UNIFORM PERENNIAL VEGETATIVE COVER IS ESTABLISHED WITH A DENSITY OF AT LEAST 70%. THE CONTRACTOR IS RESPONSIBLE FOR NOTIFYING THE OWNER WHEN THE VEGETATIVE DENSITY REACHES AT LEAST 70%. THE OWNER IS RESPONSIBLE FOR TERMINATING DNR PERMIT COVERAGE.

AMENDMENTS:

THE CONTRACTOR IS RESPONSIBLE FOR AMENDING THE EROSION & SEDIMENT CONTROL PLAN IF: THERE IS A CHANGE IN CONSTRUCTION, OPERATION OR MAINTENANCE AT THE SITE WHICH HAS THE REASONABLE POTENTIAL FOR THE DISCHARGE OF POLLUTANTS; THE ACTIONS REQUIRED BY THE PLAN FAIL TO REDUCE THE IMPACTS OF POLLUTANTS CARRIED BY CONSTRUCTION SITE RUNOFF; OR IF THE DNR NOTIFIES THE APPLICANT OF CHANGES NEEDED IN THE PLAN. THE DNR AND OWNER SHALL BE NOTIFIED 5 WORKING DAYS PRIOR TO MAKING CHANGES TO THE PLAN.

CONTACT INFORMATION:

LANDOWNER: BOYS & GIRLS CLUBS OF THE FOX VALLEY
GREG LEMKE-ROCHON, CHIEF PROFESSIONAL OFFICER
PHONE: (920) 750-5801
EMAIL: glemkerochon@bgclubfoxvally.org

DESIGNER: McMAHON
P.O. BOX 1025
NEENAH, WI 54957-1025
JENNIFER SCHAFF, PROJECT ENGINEER
PHONE: (920) 751-4200
EMAIL: jschaff@mcmgrp.com

PROJECT DESCRIPTION:

THE SITE IS LOCATED AT INTERSECTION OF RACINE STREET AND SIXTH STREET IN THE CITY OF MENASHA, WINNEBAGO COUNY, WISCONSIN (SE 1/4, NE 1/4 SECTION 15, T20N, R17E) THE DEVELOPABLE AREA OF THE SITE IS 1.8 ACRES. 1.8 ACRES ARE ESTIMATED TO BE DISTURBED DURING CONSTRUCTION.

THE PROJECT CONSISTS OF DEMOLITION OF EXISTING SITE FEATURES AND OF CONSTRUCTION OF ONE BUILDING, PARKING LOT, OUTDOOR PLAY AREAS, ACCESS DRIVES AND LANDSCAPING FEATURES. SOME MINOR UTILITY WORK INCLUDING STORM SEWER, CABLE TV, TELEPHONE LINES AND SEWER AND WATER LATERALS.

RUNOFF FROM THE SITE CURRENTLY DISCHARGES TO STORM SEWERS IN RACINE AND SIXTH STREETS. POST PROJECT RUNOFF WILL BE TREATED BY TWO BIO-FILTERS. THE BIO-FILTERS AND RUNOFF UNCAPTURED BY THE BIOFILTERS WILL DISCHARGE TO RACINE & SIXTH STREET STORM SEWERS.

SOIL INFORMATION WAS OBTAINED FROM THE USDA NATURAL RESOURCES CONSERVATION SERVICE. ON SITE SOILS CONSIST
OF WINNECONNE SILTY CLAY LOAM AND ARE HYDROLOGIC SOIL TYPE C.

TEMPORARY SEEDING:

TEMPORARY STABILIZATION	APPLICATION RATE	CRITERIA
POLYACRYLAMIDE	*	*TECHNICAL STANDARD 1050.
MULCHING (straw or hay only)		
SEEDED AREA	1½ TO 2-TON/ACRE	USE CRIMPING, NETTING, OR TACKIFIER TO ANCHOR. CONSIDER EROSION MAT.
UNSEEDED	2 TO 3 TON/ACRE	
SEEDING (select one species)		
OATS	131 LBS/ACRE	98% PURITY. SPRING/SUMMER SEEDING
WINTER WHEAT	131 LBS/ACRE	95% PURITY. FALL SEEDING
ANNUAL RYE	80 LBS/ACRE	97% PURITY. FALL SEEDING

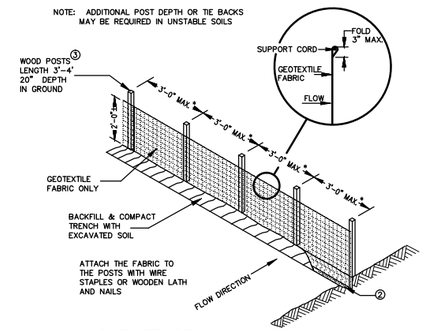

SILT FENCE

* NOTE: 8'-0" POST SPACING ALLOWED IF A WOVEN GEOTEXTILE FABRIC IS USED.

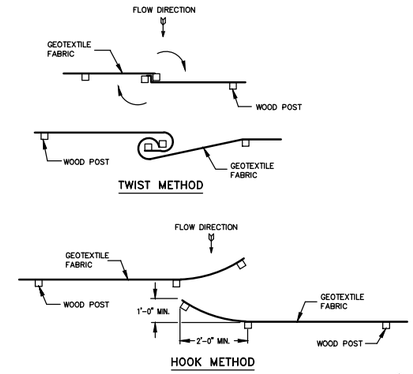

JOINING TWO LENGTHS OF SILT FENCE ⑤

This drawing based on Wisconsin Department of Transportation Standard Detail Drawing 8 E 9-6.

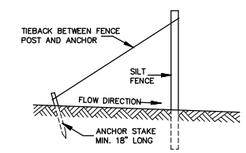

SILT FENCE TIE BACK
(WHEN ADDITIONAL SUPPORT REQUIRED)

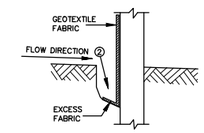

TRENCH DETAIL

GENERAL NOTES

① HORIZONTAL BRACE REQUIRED WITH 2" X 4" WOODEN FRAME OR EQUIVALENT AT TOP OF POSTS.

② TRENCH SHALL BE A MINIMUM OF 4" WIDE & 6" DEEP TO BURY AND ANCHOR THE GEOTEXTILE FABRIC. FOLD MATERIAL TO FIT TRENCH AND BACKFILL & COMPACT TRENCH WITH EXCAVATED SOIL.

③ WOOD POSTS SHALL BE A MINIMUM SIZE OF 1" X 1" OF OAK OR HICKORY.

④ SILT FENCE TO EXTEND ACROSS THE TOP OF THE PIPE.

⑤ CONSTRUCT SILT FENCE FROM A CONTINUOUS ROLL IF POSSIBLE BY CUTTING LENGTHS TO AVOID JOINTS. IF A JOINT IS NECESSARY USE ONE OF THE FOLLOWING TWO METHODS; A) OVERLAP THE END POSTS AND TWIST, OR ROTATE, AT LEAST 180 DEGREES, B) HOOK THE END OF EACH SILT FENCE LENGTH.

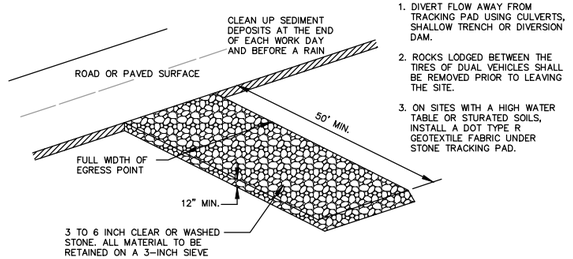

1. DIVERT FLOW AWAY FROM TRACKING PAD USING CULVERTS, SHALLOW TRENCH OR DIVERSION DAM.
2. ROCKS LODGED BETWEEN THE TIRES OF DUAL VEHICLES SHALL BE REMOVED PRIOR TO LEAVING THE SITE.
3. ON SITES WITH A HIGH WATER TABLE OR STURATED SOILS, INSTALL A DOT TYPE R GEOTEXTILE FABRIC UNDER STONE TRACKING PAD.

GRAVEL TRACKING PAD DETAIL

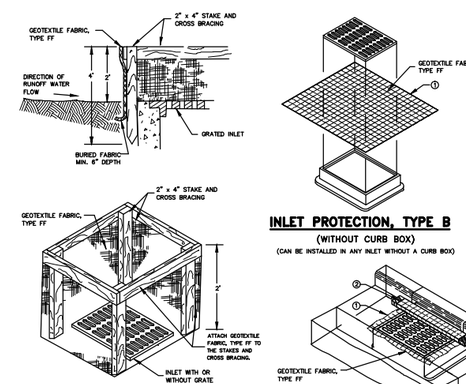

INLET PROTECTION, TYPE A

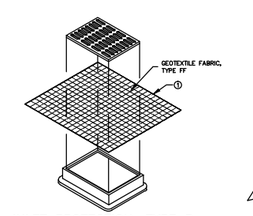

INLET PROTECTION, TYPE B
(WITHOUT CURB BOX)
(CAN BE INSTALLED IN ANY INLET WITHOUT A CURB BOX)

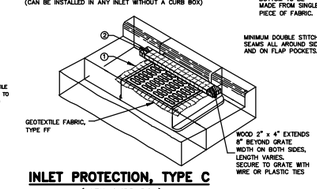

INLET PROTECTION, TYPE C
(WITH CURB BOX)

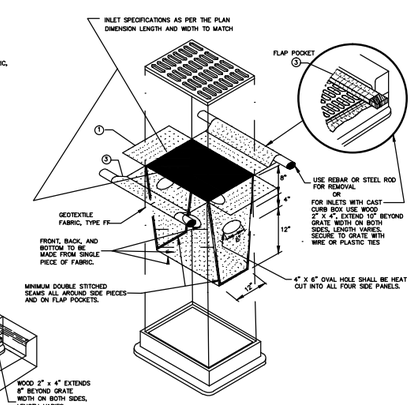

INLET PROTECTION, TYPE D
(CAN BE INSTALLED IN ANY INLET TYPE WITH OR WITHOUT A CURB BOX AS PER NOTE ②)

INSTALLATION NOTES
TYPE B & C

TRIM EXCESS FABRIC IN THE FLOW LINE TO WITHIN 3" OF THE GRATE.
THE CONTRACTOR SHALL DEMONSTRATE A METHOD OF MAINTENANCE, USING A SEWN FLAP, HAND HOLDS OR OTHER METHOD TO PREVENT ACCUMULATED SEDIMENT FROM ENTERING THE INLET.

TYPE D

DO NOT INSTALL INLET PROTECTION TYPE D IN INLETS SHALLOWER THAN 30", MEASURED FROM THE BOTTOM OF THE INLET TO THE TOP OF THE GRATE.

TRIM EXCESS FABRIC IN THE FLOW LINE TO WITHIN 3" OF THE GRATE.
THE INSTALLED BAG SHALL HAVE A MINIMUM SIDE CLEARANCE, BETWEEN THE INLET WALLS AND THE BAG, MEASURED AT THE BOTTOM OF THE OVERFLOW HOLES, OF 3". WHERE NECESSARY THE CONTRACTOR SHALL CINCH THE BAG, USING PLASTIC ZIP TIES, TO ACHIEVE THE 3" CLEARANCE. THE TIES SHALL BE PLACED AT A MAXIMUM OF 4" FROM THE BOTTOM OF THE BAG.

This drawing based on Wisconsin Department of Transportation Standard Detail Drawing 8 E 10-2.

STORM DRAIN INLET PROTECTION

McMAHON
ENGINEERS ARCHITECTS
1445 McMAHON DRIVE NEENAH, WI 54956
Mailing: P.O.BOX 1025 NEENAH, WI 54957-1025
Tel: (920) 751-4200 Fax: (920) 751-4284
www.mcmgrp.com

McMahon provides this drawing and data, regardless of form, as instruments of service. All rights including copyrights are retained by McMahon. The client and/or recipient agrees to the fullest extent permitted by law to indemnify and hold McMahon harmless for any reuse of or changes made to the original drawing or data without prior written consent by McMahon.

NO.	DATE	REVISION

BOYS AND GIRLS CLUB
CITY OF MENASHA
EROSION & SEDIMENT CONTROL DETAILS

DESIGNED	DRAWN
JLS	KRH

PROJECT NO. M0032-940326
DATE JULY 2014
SHEET NO. C6

W:\PROJECTS\M0032\940326\00\Acad\C6 EROSION & SEDIMENT CONTROL DETAILS.dwg, C6 EROSION & SEDIMENT CONTROL DETAILS, Plot Date: 8/6/2014 7:14:21 AM, khegner, 1:2
khegner, W:\PROJECTS\M0032\940326\00\Acad\C6 EROSION & SEDIMENT CONTROL DETAILS.dwg, c6 erosion & sediment control details, Plot Date: 8/6/2014 7:14 AM, xrefs:none

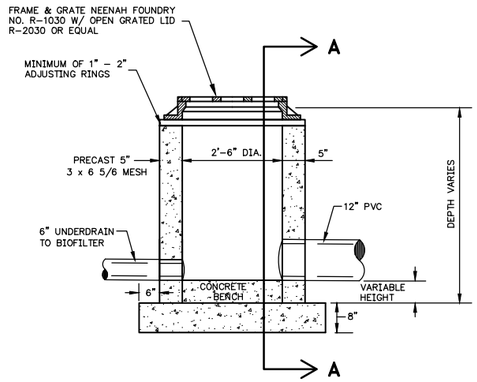

INLET "A" DETAIL

RIP-RAP

1. RIP-RAP SHALL BE IN ACCORDANCE WITH LIGHT RIP-RAP PER SECTION 606, WS-DOT STANDARD SPECIFICATIONS FOR HIGHWAY AND STRUCTURE CONSTRUCTION, 2013 EDITION.
2. RIP-RAP SHALL BE ANGULAR. ROUND RIP-RAP IS NOT PERMITTED.

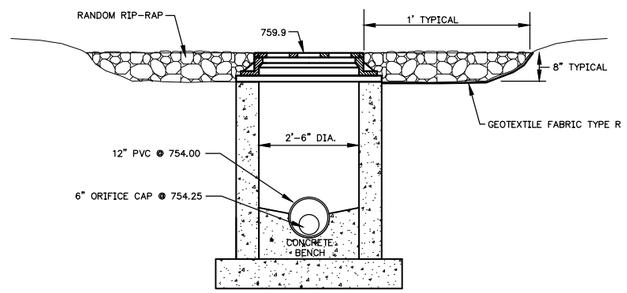

INLET "A" SECTION A-A

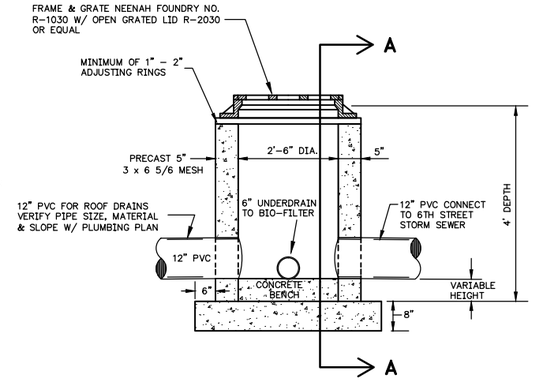

INLET "B" DETAIL

RIP-RAP

1. RIP-RAP SHALL BE IN ACCORDANCE WITH LIGHT RIP-RAP PER SECTION 606, WS-DOT STANDARD SPECIFICATIONS FOR HIGHWAY AND STRUCTURE CONSTRUCTION, 2013 EDITION.
2. RIP-RAP SHALL BE ANGULAR. ROUND RIP-RAP IS NOT PERMITTED.

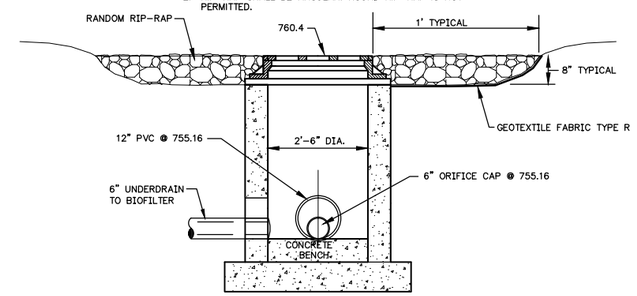

INLET "B" SECTION A-A

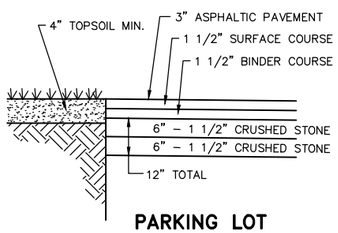

PARKING LOT

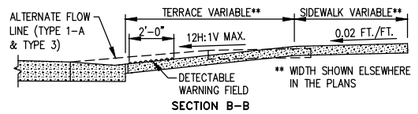

SECTION B-B

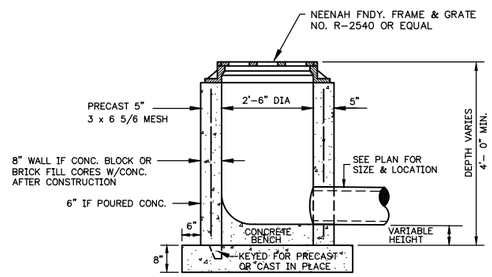

YARD DRAIN DETAIL

SCALE: NONE

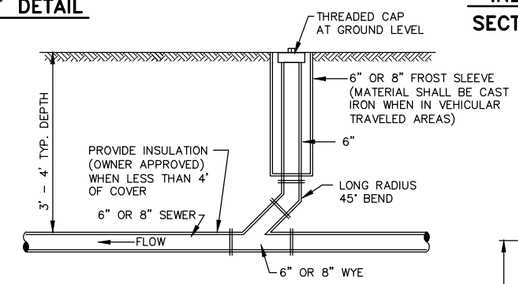

CLEANOUT DETAIL

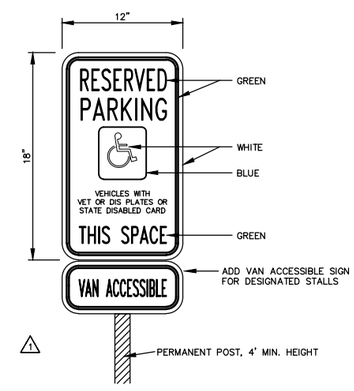

ADA PARKING SIGN

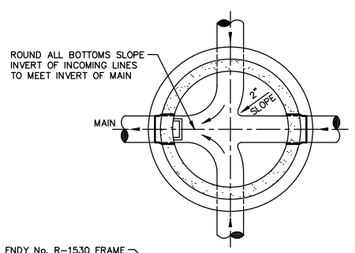

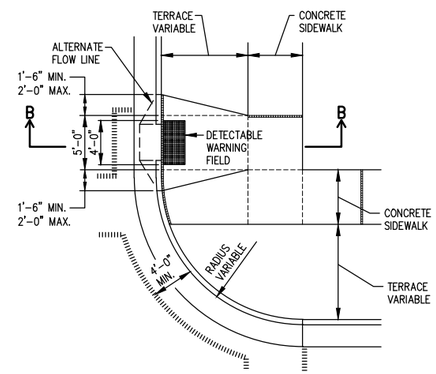

PLAN VIEW

TYPE 3 RAMP

(OUTSIDE OF CROSSWALK AREA)

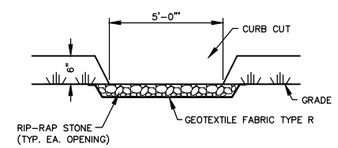

SECTION

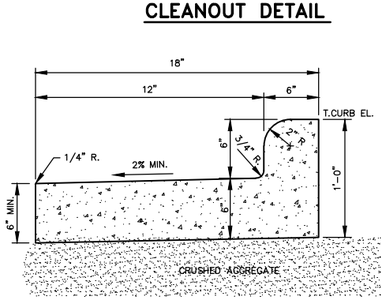

REVERSE SLOPE CURB & GUTTER

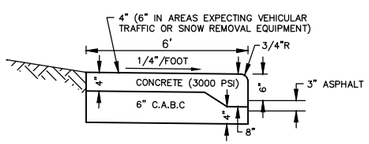

CURB-FACED CONCRETE SIDEWALK

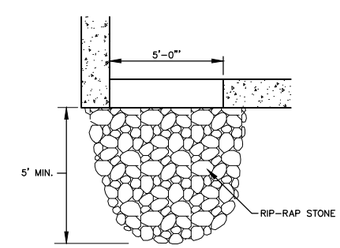

PLAN

CURB CUT @ CORNER

RIP-RAP

1. RIP-RAP SHALL BE LIGHT RIP RAP IN ACCORDANCE WITH SECTION 606, WIS-DOT STANDARD SPECIFICATIONS FOR HIGHWAY AND STRUCTURE CONSTRUCTION, 2013 EDITION.
2. RIP-RAP SHALL BE ANGULAR. ROUND RIP-RAP IS NOT PERMITTED.

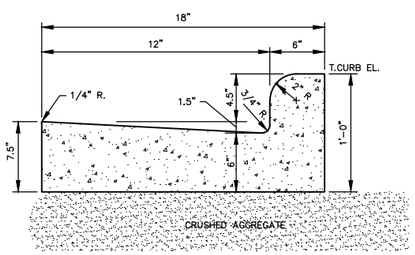

CURB AND GUTTER DETAIL *

* NOTE CURB & GUTTER ALONG SIXTH STREET AND RACINE STREET SHALL BE 30" WIDE AND MATCH WISCONSIN DEPARTMENT OF TRANSPORTATION SPECIFICATIONS FOR CURB & GUTTER.

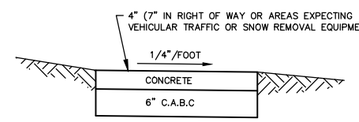

CONCRETE SIDEWALK

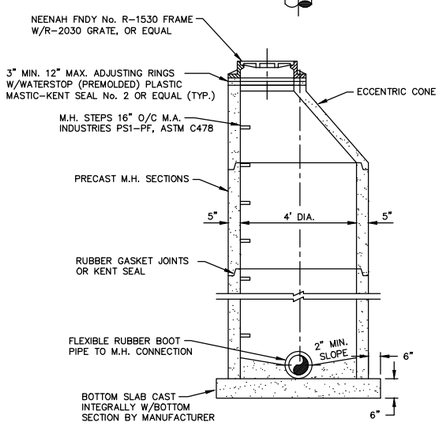

STANDARD PRECAST STORM MANHOLE

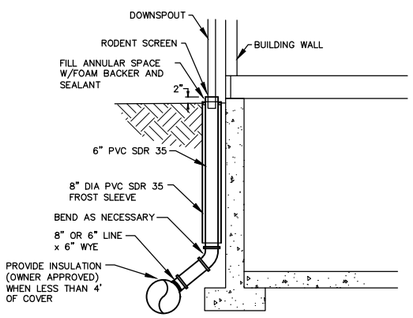

DOWNSPOUT CONNECTION

McMAHON
ENGINEERS ARCHITECTS
1445 McMAHON DRIVE NEENAH, WI 54956
Mailing: P.O.BOX 1025 NEENAH, WI 54957-1025
Tel: (920) 751-4200 Fax: (920) 751-4284
www.mcmgrp.com

McMahon provides this drawing and data, regardless of form, as instruments of service. All rights including copyrights are retained by McMahon. The client and/or recipient agrees to the fullest extent permitted by law to indemnify and hold McMahon harmless for any reuse of or changes made to the original drawing or data without prior written consent by McMahon.

NO.	DATE	REVISION

BOYS AND GIRLS CLUB
CITY OF MENASHA
MISCELLANEOUS DETAILS

DESIGNED	DRAWN
JLS	KRH

PROJECT NO. M0032-940326

DATE JULY 2014

SHEET NO. C7

W:\PROJECTS\M0032\940326\00\Acad\C7 MISCELLANEOUS DETAILS.dwg, C7 MISCELLANEOUS DETAILS, 8/6/2014 7:14:26 AM, khegner, 1:2
khegner, W:\PROJECTS\M0032\940326\00\Acad\C7 MISCELLANEOUS DETAILS.dwg, c7 miscellaneous details, Plot Date: 8/6/2014 7:14 AM, xrefs:none

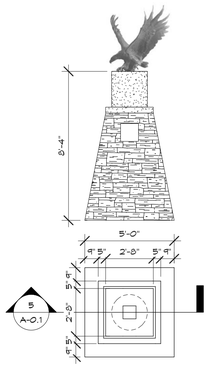

4 A-0.1 **THE ELEMENT**
1/4" = 1'-0"

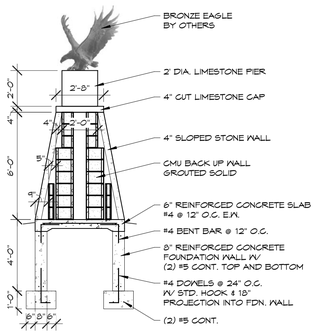

5 A-0.1 **THE ELEMENT SECTION**
1/4" = 1'-0"

GENERAL PROJECT NOTES:

PROJECT NAME: BOYS & GIRLS CLUB OF MENASHA

PROPERTY ADDRESS: 600 RACINE STREET
MENASHA, WISCONSIN

ZONING DESCRIPTION: GENERAL COMMERCIAL DISTRICT (C-1)

SITE AREA: 62,335 S.F. / 1.799 ACRES

AREA PERCENTAGE:

BUILDING AREA (FOOTPRINT):	25,454 S.F.	40.8%
IMPERVIOUS AREA:		
- PAVEMENTS	12,952 S.F.	20.7%
LANDSCAPE AREA:	23,924 S.F.	38.5%
TOTAL SITE AREA:	62,335 S.F.	100.0%

PARKING CALCULATIONS:

RECREATIONAL BUILDING OR COMMUNITY CENTER:

MINIMUM PARKING REQUIREMENTS:

SPACES IN ADEQUATE NUMBER AS DETERMINED BY THE DEPARTMENT OF COMMUNITY DEVELOPMENT

	PROVIDED
STAFF/GENERAL PARKING	24
SHORT TERM PARKING	3
ACCESSIBLE PARKING	2

TOTAL PARKING PROVIDED = 29 STALLS

GENERAL SITE PLAN NOTES:

- GENERAL CONTRACTOR TO PROVIDE CONCRETE MECHANICAL EQUIPMENT PADS. COORDINATE SIZE & REINF. REQUIREMENTS WITH MECHANICAL & ELECTRICAL CONTRACTOR.
- GENERAL CONTRACTOR TO PROVIDE SILT FENCE / EROSION CONTROL MEASURES PER CIVIL DRAWINGS AND LOCAL MUNICIPALITY REQUIREMENTS. EROSION CONTROL MEASURES MUST BE IMPLEMENTED AND MAINTAINED THROUGHOUT CONSTRUCTION.
- ALL SITE UTILITIES MUST BE VERIFIED PRIOR TO CONSTRUCTION.
- PATCH ANY AREA OF ASPHALT PAVING OR CONCRETE PAVING AND CONC. CURB. DISTURBED BY CONSTRUCTION.
- GENERAL CONTRACTOR TO ROUGH GRADE AND FINISH GRADE ANY AREAS DISTURBED BY CONSTRUCTION. SEEDING OF AREAS BY GENERAL CONTRACTOR. ALL DRIVEWAY CUTS AND CURBING SHALL COMPLY WITH THE LOCAL MUNICIPALITY STANDARDS.
- SEE LANDSCAPE PLAN SHEET L0.1 FOR PLANTING INFORMATION.
- HANDICAP ACCESSIBILITY MUST BE MAINTAINED AT ALL FRONT AND REAR DOORS. COORDINATE PARKING LOT GRADING AND RAMPS WITH DOOR LOCATIONS.
- EROSION CONTROL MEASURES SHALL BE MAINTAINED THROUGHOUT THE DURATION OF CONSTRUCTION UNTIL THE SITE IS STABILIZED BY VEGETATION OR OTHER APPROVED MEANS.
- ALL ACTIVITIES SHALL BE CONDUCTED IN A LOGICAL SEQUENCE AS TO MINIMIZE THE AMOUNT OF BARE SOIL EXPOSED AT ANY ONE TIME. MAINTAIN EXISTING VEGETATION AS LONG AS POSSIBLE.
- ALL SEDIMENT LADEN WATER PUMPED FROM THE SITE SHALL BE TREATED BY A TEMPORARY SEDIMENT BASIN OR BE FILTERED BY OTHER APPROVED MEANS. WATER SHALL NOT BE DISCHARGED IN A MANNER THAT CAUSES EROSION OF THE SITE OR RECEIVING CHANNEL DURING FINAL LANDSCAPING.
- DISTURBED GROUND OUTSIDE OF THE EVERYDAY CONSTRUCTION AREA, INCLUDING SOIL STOCKPILES LEFT INACTIVE FOR MORE THEN 10 DAYS, SHALL AT A MINIMUM BE TEMPORARILY STABILIZED BY SEEDING / MULCHING OR OTHER METHODS APPROVED BY THE LOCAL MUNICIPALITY EROSION CONTROL INSPECTOR.
- WASTE MATERIAL GENERATED ON THE CONSTRUCTION SITE SHALL BE PROPERLY DISPOSED OF AND NOT ALLOWED TO RUN INTO A RECEIVING WATER OR STORM SEWER SYSTEM.
- IN THE CASE OF LATE SEASON AND WINTER CONSTRUCTION, RESTORATION / LANDSCAPING OF THE SITE SHALL OCCUR NO LATER THAN JUNE 1st OF THE NEXT CONSTRUCTION SEASON. EROSION CONTROL MEASURES SHALL REMAIN INTACT UNTIL FINAL RESTORATION OF THE SITE IS COMPLETE. FABRIC INSIDE THE INLET AND CATCH BASIN GRATING SHALL BE REMOVED AS SOON AS FREEZING WEATHER OCCURS SO DRAINAGE IS NOT IMPAIRED THROUGHOUT THE WINTER MONTHS. ALL EROSION CONTROL PRACTICES REMOVED OR DAMAGED DUE TO WINTER WEATHER SHALL BE REPLACED IN THE SPRING IMMEDIATELY AFTER THE THAW.
- EROSION CONTROL DEVICES DESTROYED AS A RESULT OF CONSTRUCTION ACTIVITIES SHALL BE REPAIRED BY THE END OF THE WORK DAY.
- TEMPORARY EROSION CONTROL MEASURES SHALL BE REMOVED AT THE CONCLUSION OF CONSTRUCTION AFTER STABILIZATION OF DISTURBED SOIL HAS OCCURRED.
- THE EXISTING GRASS STREET TERRACE WITHIN THE LOCAL MUNICIPALITY RIGHT OF WAY SHALL BE MAINTAINED AS BUFFER THROUGHOUT CONSTRUCTION. AT A MINIMUM, THE GRASS TERRACE SHALL BE RESTORED WITH TEMPORARY SEED (OATS / RYE) AND MULCHED WITHIN 10 DAYS OF THE COMPLETION OF ALL LATERAL INSTALLATIONS AND OTHER CONSTRUCTION ACTIVITY. IF THE TERRACE IS NOT TO BE RESTORED DURING FINAL LANDSCAPING, A PERMANENT SEED MIX SHALL BE UTILIZED.

REFER TO SHEET L-0.1 & L-0.2
FOR LANDSCAPE REQUIREMENTS

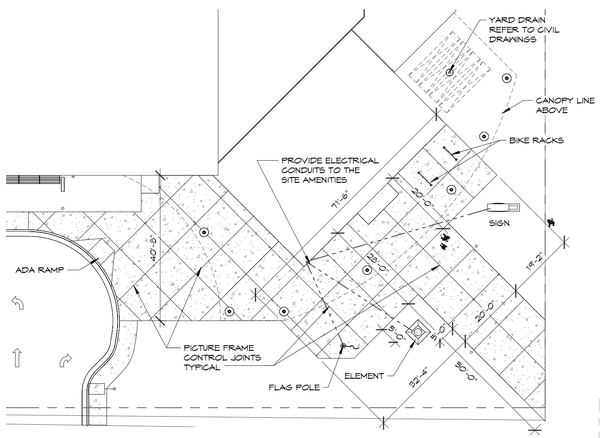

3 A-0.1 **SIDEWALK LAYOUT**
1" = 20'-0"

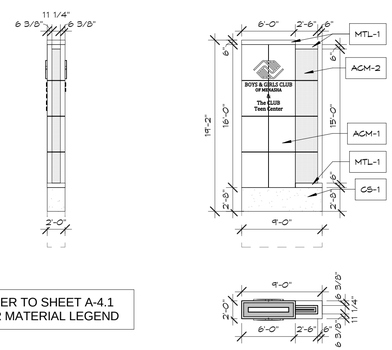

REFER TO SHEET A-4.1
FOR MATERIAL LEGEND

2 A-0.1 **MONUMENT SIGN**
1/8" = 1'-0"

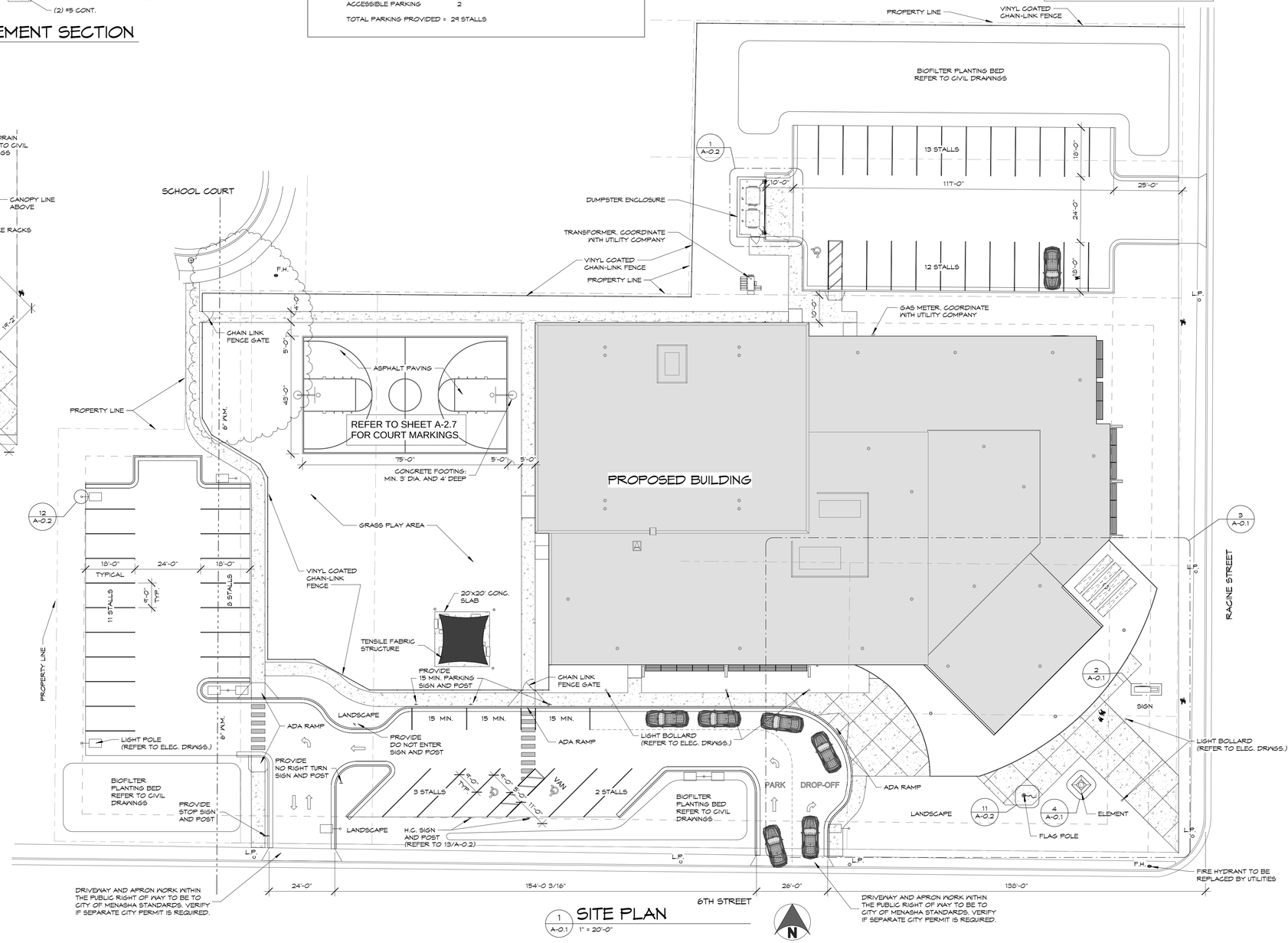

1 A-0.1 **SITE PLAN**
1" = 20'-0"

Gries
Architectural Group Inc.
500 North Commercial Street
Neenah, Wisconsin 54956
Phone: 920-722-2445 Fax: 920-722-6605
www.griesarchitectural.com

©Copyright. This Print/Computer File Is The Exclusive Property Of Gries Architectural Group, Inc. Use Only For Purpose Which Loaned. Copying Or Reproducing Is Prohibited. Return Upon Request.

A NEW BUILDING FOR:
BOYS & GIRLS CLUB OF MENASHA
MENASHA, WISCONSIN

date: 03-10-2015
job: 14-009
d. by: JJS, SMB, MJB
rev.: 02/02/2015

A-0.1

Z:\2014\14-009 Boys and Girls Club- Menasha\REVIT\14-009 Boys and Girls Club.rvt
3/10/2015 5:23:29 PM

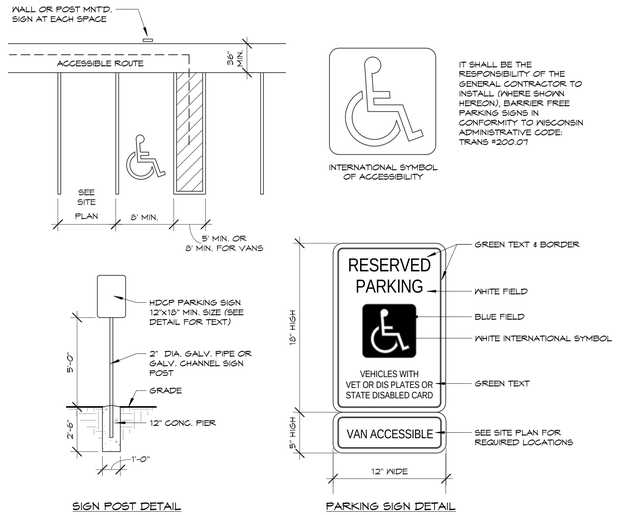

13 HC PARKING DETAILS
A-0.2 NOT TO SCALE

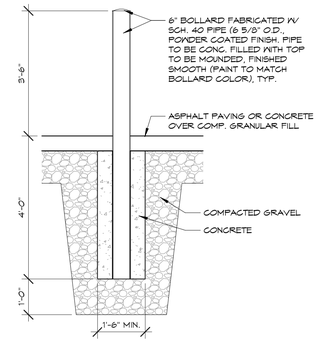

7 BOLLARD DETAIL
A-0.2 1/2" = 1'-0"

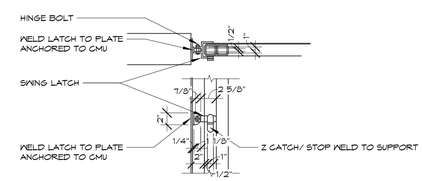

SIDE GATE LATCH DETAILS

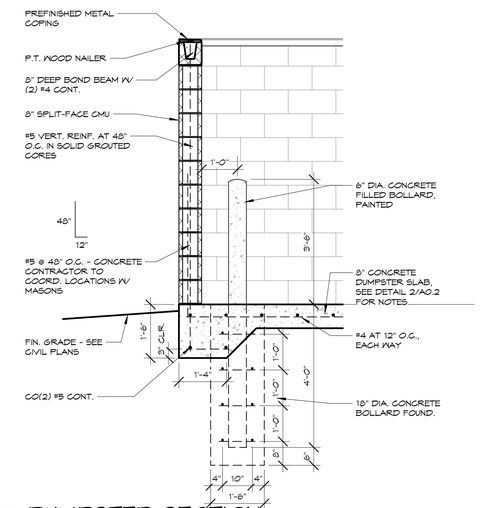

3 DUMPSTER SECTION
A-0.2 1/2" = 1'-0"

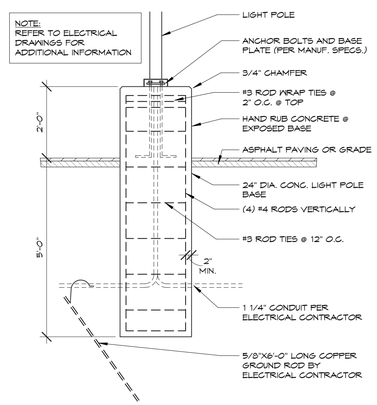

12 LIGHT POLE BASE DETAIL
A-0.2 1/2" = 1'-0"

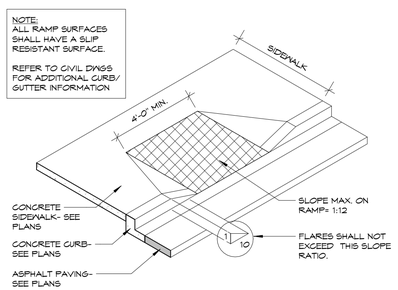

10 CURB RAMP DETAIL
A-0.2 1/4" = 1'-0"

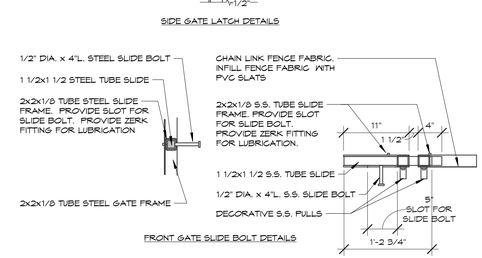

FRONT GATE SLIDE BOLT DETAILS

6 GATE LATCH DETAIL
A-0.2 1" = 1'-0"

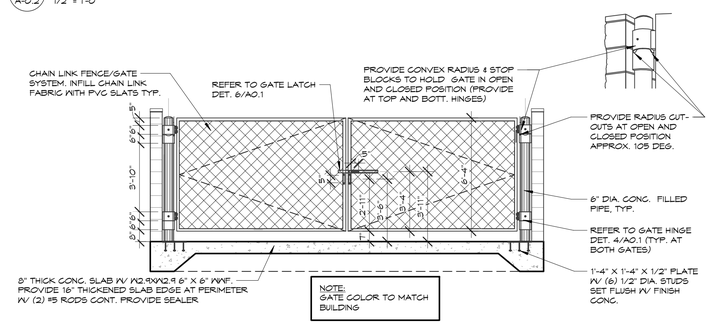

2 DUMPSTER - FRONT ELEVATION
A-0.2 1/4" = 1'-0"

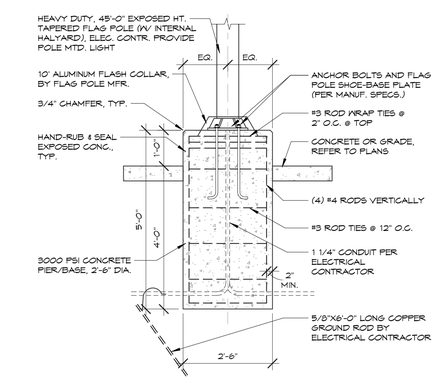

11 FLAG POLE BASE DET.
A-0.2 1/2" = 1'-0"

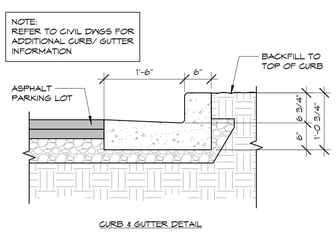

CURB & GUTTER DETAIL

9 CURB & GUTTER DETAIL
A-0.2 3/4" = 1'-0"

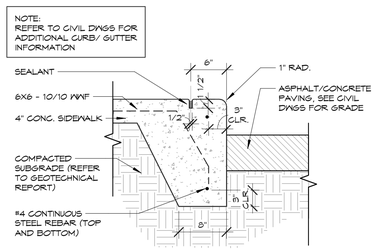

8 CURB & SIDEWALK DETAIL
A-0.2 1" = 1'-0"

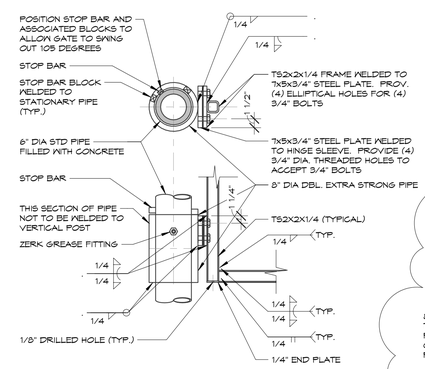

5 GATE HINGE DETAIL
A-0.2 1" = 1'-0"

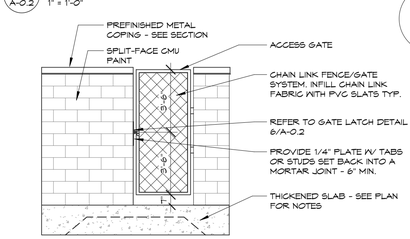

4 DUMPSTER - SIDE ELEVATION
A-0.2 1/4" = 1'-0"

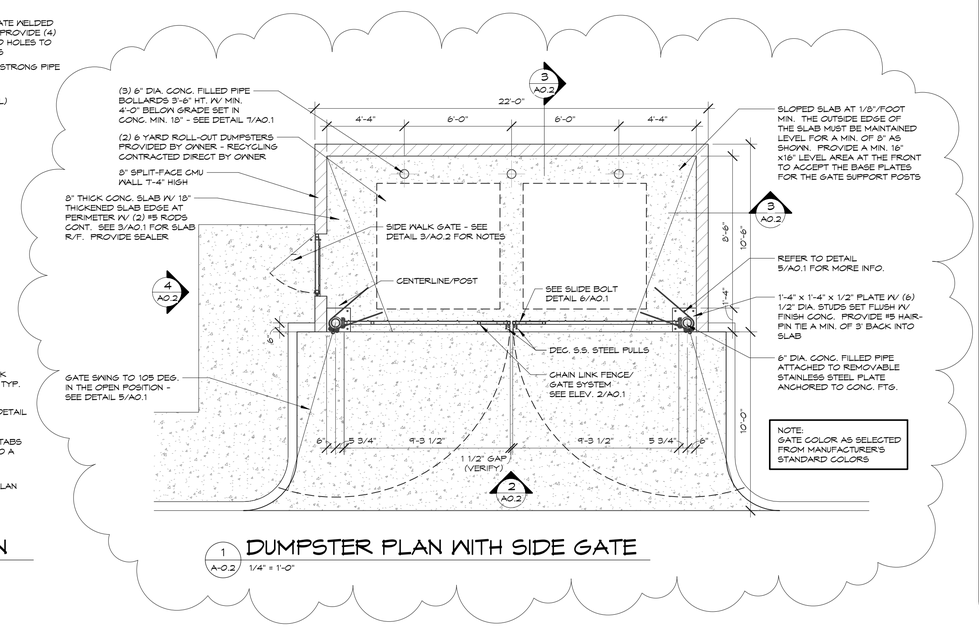

1 DUMPSTER PLAN WITH SIDE GATE
A-0.2 1/4" = 1'-0"

Gries Architectural Group Inc.
500 North Commercial Street
Neenah, Wisconsin 54956
Phone: 920-722-2445 Fax: 920-722-6605
www.griesarchitectural.com

©Copyright. This Print/Computer File Is The Exclusive Property Of Gries Architectural Group, Inc. Use Only For Purpose Which Loaned. Copying Or Reproducing Is Prohibited. Return Upon Request.

A NEW BUILDING FOR:
BOYS & GIRLS CLUB OF MENASHA
MENASHA, WISCONSIN

date: 03-10-2015
job: 14-009
d. by: SMB
rev.: 02/02/2015

A-0.2

Z:\2014\14-009 Boys and Girls Club- Menasha\REVIT\14-009 Boys and Girls Club.rvt
3/10/2015 5:13:49 PM

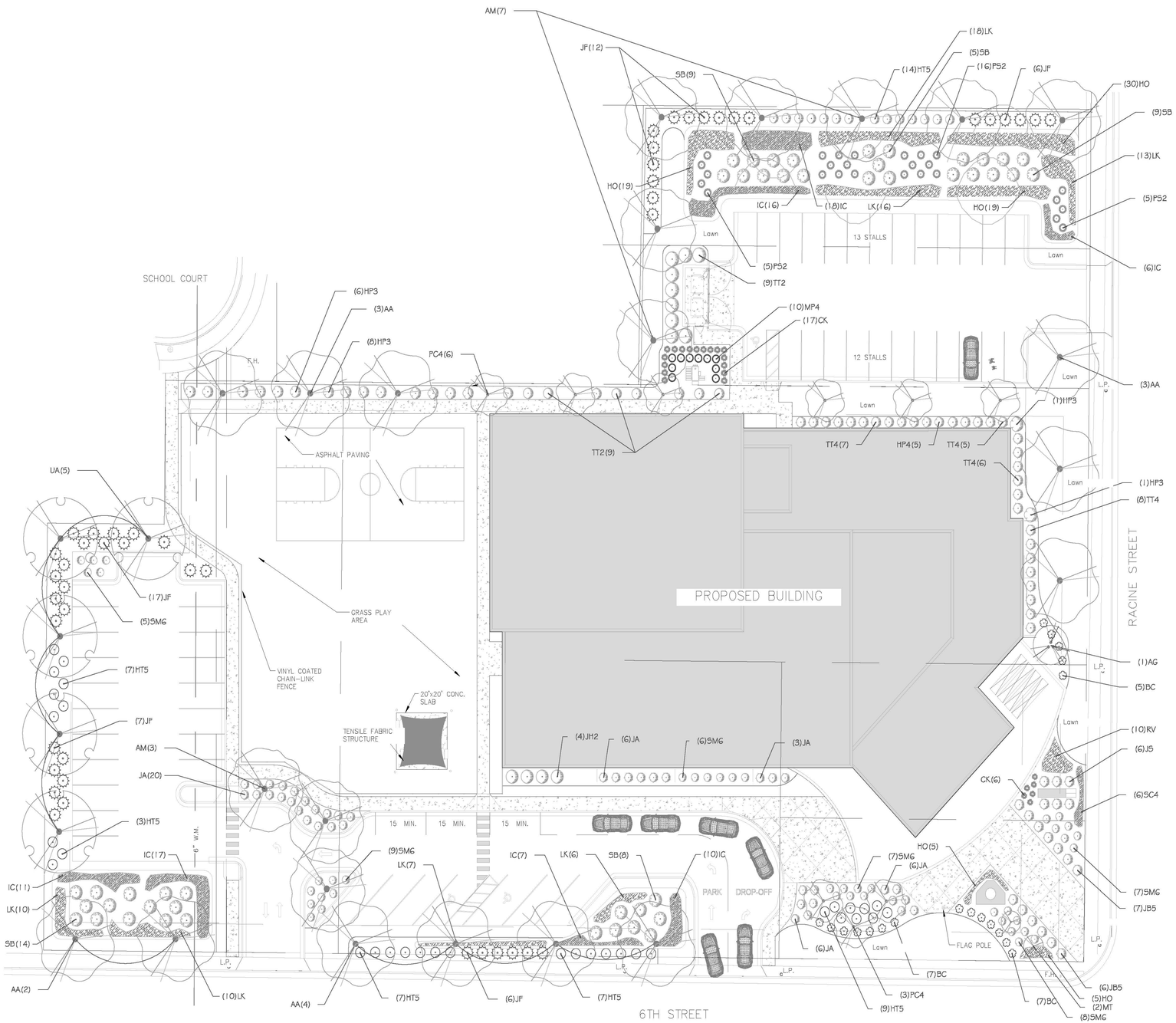

PLANT SCHEDULE

TREES	COMMON NAME	BOTANICAL NAME	SIZE	QTY
AA	Autumn Blaze Maple	Acer freemanii `Autumn Blaze`	2" b&b	12
AM	State Street Maple	Acer miyabei `Morton` TM	2" b&b	10
AG	Autumn Brilliance Serviceberry	Amelanchier x grandiflora `Autumn Brilliance`	5-6' b&b	1
MT	Tina Crabapple	Malus x `Tina`	2" b&b	2
PC4	Cleveland Select Pear	Pyrus calleryana `Cleveland Select`	2" b&b	9
UA	Accolade Elm	Ulmus x `Accolade`	2" b&b	5
SHRUBS	**COMMON NAME**	**BOTANICAL NAME**	**SIZE**	**QTY**
BC	Concord Barberry	Berberis thunbergii `Concorde`	3 gal	19
HP4	Twist-n-Shout Hydrangea	Hydrangea macrophylla `PIIHM-I`	5 gal	5
HP3	Pinky Winky Hydrangea	Hydrangea paniculata `Pinky Winky`	3 gal	16
HT5	Tickled Pink Hydrangea	Hydrangea paniculata `Tickled Pink`	5 gal	47
JH2	Hetzi Column Juniper	Juniperus chinensis `Hetzii Columnaris`	5 gal	4
JF	Sea Green Juniper	Juniperus chinensis `Sea Green`	5 gal	48
JA	Andorra Compact Juniper	Juniperus horizontalis `Compacta`	3 gal	41
JB5	Broadmoor Juniper	Juniperus sabina `Broadmoor`	5 gal	13
JS	Savin Juniper	Juniperus sabina `Savin`	5 gal	6
SB	Black Lace Elderberry	Sambucus nigra `Black Lace`	2 gal	45
SMG	Magic Carpet Spirea	Spiraea japonica `Magic Carpet`	3 gal	42
TT4	Tauton Yew	Taxus x media `Tauntoni`	3 gal	26
TT2	Techny Arborvitae	Thuja occidentalis `Techny`	5-6' b&b	18
GRASSES	**COMMON NAME**	**BOTANICAL NAME**	**SIZE**	**QTY**
CK	Karl Foerster Grass	Calamagrostis x acutiflora `Karl Foerster`	1 gal	23
MP4	Flame Grass	Miscanthus sinensis `Purpurescens`	1 gal	10
PS2	Shenandoah Switch Grass	Panicum virgatum `Shenendoah`	1 gal	26
PERENNIALS	**COMMON NAME**	**BOTANICAL NAME**	**SIZE**	**QTY**
HO	Stella de Oro Daylily	Hemerocallis x `Stella de Oro`	1 gal	78
IC	Caesar`s Brother Iris	Iris sibirica `Caesar`s Brother`	1 gal	85
LK	Kobold Liatris	Liatris spicata `Kobold`	1 gal	80
RV	Little Suzy Black-Eyed Susan	Rudbeckia fulgida `Viette`s Little Suzy`	1 gal	10
SC4	Cardonna Salvia	Salvia nemorosa `Caradonna`	1 gal	6

NOTES:
-All planting beds to be separated from lawn by Commercial Grade Cobra Edging
-All planting beds to have shredded hardwood mulch
-Rain Gardens to be covered with hardwood mulch

0 20 40 60 feet
1" = 20'

Schmalz
Custom Landscaping and Garden Center

LANDSCAPE ARCHITECTURE
DEVELOPMENT
CONSTRUCTION

AWARD WINNING DESIGN AND INSTALLATION

W2484 CTY RD KK
APPLETON, WI 54915-9464
PHONE 920-733-8223
FAX 920-733-3282
WWW.SCHMALZLANDSCAPING.COM

All ideas, designs, arrangements and plans indicated by this drawing are owned by, and are the property of Schmalz Custom Landscaping. None of these ideas, arrangements or plans shall be disclosed to any person, firm or contractor for any purpose without the written permission of Schmalz Custom Landscaping, Inc.
Written dimensions on this plan shall have precedence over scaled dimensions.
DO NOT SCALE
© 2009, Schmalz Custom Landscaping, Inc.

NORTH

Bous & Girls Club - Menasha
6th Street
Menasha, WI 54952

DATE: 7/16/2014
REVISED: 2/4/2015
PHONE NO. 000-000-0000
EMAIL: emailaddress@rere.com
SCALE: 1" = 20'-0"
DRAWN BY: DCV
SHEET TITLE
Landscape Plan
SHEET NO. L-1
JOB # FILE NO.

Gries
Architectural Group Inc.
500 North Commercial Street
Neenah, Wisconsin 54956
Phone: 920-722-2445 Fax: 920-722-6605
www.griesarchitectural.com

©Copyright. This Print/Computer File Is The Exclusive Property Of Gries Architectural Group, Inc. Use Only For Purpose Which Loaned. Copying Or Reproducing Is Prohibited. Return Upon Request.

A NEW BUILDING FOR:
BOYS & GIRLS CLUB OF MENASHA
MENASHA, WISCONSIN

date: 03-10-2015
job: 14-009
d. by: SMB
rev.: 03/10/15

L-0.1

Z:\2014\14-009 Boys and Girls Club- Menasha\REVIT\14-009 Boys and Girls Club.rvt
3/10/2015 4:59:15 PM

LANDSCAPE PLAN GENERAL NOTES:

1. ALL PLANT MATERIAL SHALL BE A QUALITY CONSISTENT WITH STANDARDS OF AMERICAN ASSOCIATION OF NURSERYMEN (ANSI Z60.1).

2. ALL AREAS THAT ARE LANDSCAPED WITH BOULDERS, ROCK, AND/OR MULCH, SHALL HAVE A 3 OZ. WEED BARRIER FABRIC INSTALLED PRIOR TO FINISH LANDSCAPING MATERIAL BEING INSTALLED. REFER TO PLANS & SCHEDULE FOR FINISH LANDSCAPE MATERIAL TYPE.

3. ALL LANDSCAPE SHRUB/PLANT BEDS SHALL BE EDGED WITH COMMERCIAL GRADE PLASTIC EDGING SYSTEM, TYPICAL.

4. ALL LAWN AREAS TO BE SEEDED & MULCHED AS REQUIREDD TO MINIMIZE SEED WASH-OUT. PROVIDE TOPSOIL AND FINISH GRADING AS REQUIRED.

5. LANDSCAPING OF SITE AS SHOWN. FINAL SPECIES OF PLANTINGS TO BE APPROVED BY ARCHITECT/MUNICIPALITY IF REVISED BY LANDSCAPER.

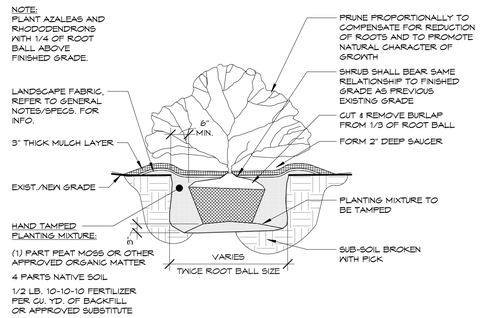

3 L-0.2 SHRUB INSTALLATION- BALL & BURLAP

1/2" = 1'-0"

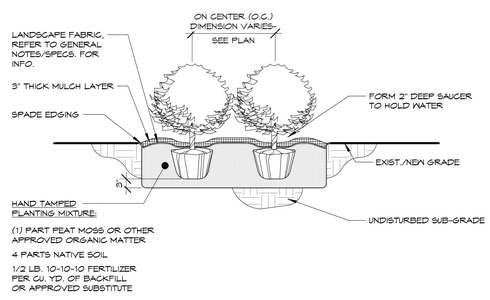

2 L-0.2 SHRUB INSTALLATION- CONTAINER

1/2" = 1'-0"

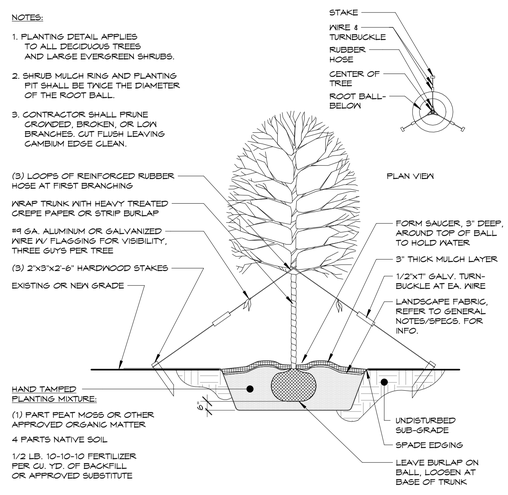

1 L-0.2 TREE INSTALLATION DETAIL

1/4" = 1'-0"

GENERAL NOTES:

1. THE LANDSCAPE REQUIREMENTS OF GOVERNMENTAL AGENCIES, WHEN IN CONFLICT WITH INFORMATION SHOWN ON THESE PLANS, SHALL TAKE PRECIDENCE OVER ANY AND ALL SPECIFICATIONS AND GUIDELINES SET FORTH HEREIN.

2. THE LANDSCAPE CONTRACTOR SHALL BE RESPONSIBLE FOR VERIFYING THE EXACT LOCATION OF ALL UNDERGROUND UTILITIES PRIOR TO ANY EXCAVATION OR PLANTING AND SHALL BE RESPONSIBLE FOR THEIR REPAIR OR PAY FOR ALL DAMAGES MADE TO UNDERGROUND UTILITES.

3. ALL AREAS NOT COVERED BY BUILDING, PAVEMENTS OR OTHER PERMANENT CONSTRUCTION SHALL BE PLANTED, SEEDED AND/OR MULCHED IN ACCORDANCE WITH THE PLANS AND SPECIFICATIONS.

PLANT MATERIALS:

1. PROVIDE PLANTS OF QUANTITY, SIZE, GENUS, SPECIES, AND VARIETY SHOWN AND SCHEDULED AND IN CONFORMANCE WITH THE REQUIREMENTS OF ANSI Z60.1 "AMERICAN STANDARD FOR NURSERY STOCK". PLANTS SHALL HAVE BEEN GROWN IN A RECOGNIZED NURSERY IN ACCORDANCE WITH GOOD HORTICULTURAL PRACTICE.

2. ALL PLANTS SHALL BE FULL, WELL-BRANCHED PLANTS CHARACTERISTIC OF THE SPECIES. PLANTS SHALL BE FREE OF DISEASE, INSECTS, EGGS, LARVAE, AND DEFECTS SUCH AS KNOTS, SUN-SCALD, INJURIES, ABRASIONS, OR DISFIGUREMENT.

3. PLANT STOCK SHALL HAVE BEEN GROWN UNDER CLIMATIC CONDITIONS SIMILAR TO CONDITIONS IN THE LOCALITY OF THE PROJECT.

4. LABEL AT LEAST ONE PLANT OF EACH KIND WITH A SECURELY ATTACHED WATERPROOF TAG BEARING LEGIBLE DESIGNATION OF BOTANICAL AND COMMON NAME.

5. PROVIDE FRESHLY DUG BALLED & BURLAPPED PLANT MATERIALS. DO NOT DROP BALLED & BURLAPPED STOCK DURING DELIVERY.

6. DO NOT REMOVE CONTAINER-GROWN STOCK FROM CONTAINERS UNTIL PLANTING TIME.

LAWN INSTALLATION:

1. LAWN AREAS SHALL BE PREPARED ACCORDING TO THE SECTION BELOW ENTITLED "SEEDBED PREPARATION".

2. LOCALLY-GROWN SOD SHALL BE PROVIDED IN AREAS WHERE SEEDING IS NORMALLY UNSUCCESSFUL OR WILL BE UNSUCCESSFUL DUE TO CLIMATE, SEASON, OR OTHER TEMPORARY CONSTRAINT. SOD SHALL BE STRONGLY ROOTED, FREE OF WEEDS, AND OF UNIFORM THICKNESS WITH NO MORE THAN 1.5 INCHES OR LESS THAN 1 INCH OF SOIL.

3. SOD SHALL BE TIGHTLY-FITTED TOGETHER. ENDS AND EDGES SHALL MEET WITHOUT OVERLAP AND JOINTS SHALL BE STAGGERED WITH ADJACENT ROWS. AFTER INSTALLATION, SOD SHALL BE THOROUGHLY WATERED. ON SLOPES STEEPER THAN 2:1, SOD SHALL BE HELD IN PLACE WITH WOODEN STAKES MEASURING 1 INCH SQUARE BY 6 INCHES LONG. STAKES SHALL BE DRIVEN FLUSH WITH THE TOP OF THE SOD'S SOIL LAYER.

4. PROVIDE GRASS SEED THAT IS FRESH, CLEAN, NEW-CROP SEED COMPLYING WITH TOLERANCE FOR PURITY AND GERMINATION ESTABLISHED BY OFFICIAL SEED ANALYSTS OF NORTH AMERICA. PROVIDE SEED TYPE OR SEED MIX WITH BEST RECORD OF SUCCESS IN LOCALITY OF PROJECT.

5. APPLY SEED AT THE APPROPRIATE RATE FOR ESTABLISHING A NEW LAWN. SOW SEED USING A SPREADER OR SEEDING MACHINE. DISTRIBUTE SEED EVENLY OVER ENTIRE AREA BY SOWING EQUAL QUANTITY IN 2 DIRECTIONS AT RIGHT ANGLES TO EACH OTHER. RAKE SEED LIGHTLY INTO TOP 1/8-INCH OF SOIL, ROLL LIGHTLY, AND WATER WITH A FINE SPRAY.

6. PROTECT ALL SEEDED AREAS AGAINST EROSION BY SPREADING A CLEAN, SEED-FREE SALT HAY OR THRESHED STRAW OF WHEAT, RYE, OATS, OR BARLEY. SPREAD UNIFORMLY TO FORM A CONTINUOUS BLANKET NOT LESS THAN 1.5 INCHES LOOSE MEASUREMENT OVER SEEDED AREA. MULCH SHALL BE HELD IN PLACE WITH AN APPROVED PRODUCT FROM THE "EROSION CONTROL PRODUCT ACCEPTABILITY LIST, OR CRIMPING OF THE STRAW IN PLACE PER STANDARD 1058.

7. TREATMENTS SUCH AS JUTE MESH, EXCELSIOR MATTING, OR FIBERGLASS ROVING SHALL BE USED TO STABILIZE DITCHES OR STEEP SLOPES SUSCEPTIBLE TO EROSION. THE TREATMENT SHALL BE INSTALLED PRIOR TO THE MULCHING OPER- ATION.

INSTALLATION OF PLANT MATERIALS:

1. INSTALL TREES AND SHRUBS ACCORDING TO STANDARD DETAILS SHOWN ON THE PLAN.

2. ALL TREE SAUCERS SHALL BE SOAKED WITH WATER AND MULCHED IMMEDIATELY FOLLOWING PLANTING.

3. ALL TREE SAUCERS AND SHRUB BEDS SHALL BE MULCHED WITH A 3-INCH LAYER OF ORGANIC MULCH SUCH AS PINE STRAW, SHREDDED HARDWOOD, OR LICORICE ROOT. NON-ORGANIC MULCHES SUCH AS GRAVEL, CRUSHED BRICK, LAVA ROCK, ETC. ARE UNACCEPTABLE.

4. TREE GUYING SHALL BE REMOVED AFTER ONE FULL GROWING SEASON.

5. APPLY 12 CUBIC FEET OF PEAT MOSS PER 100 SQUARE FEET AND 20 POUNDS OF 8-8-8 FERTILIZER PER 100 SQUARE FEET OF GROUND COVER PLANTING BEDS. ROTOTILL THE BEDS TO A DEPTH OF 6 INCHES AND SMOOTH TO AN EVEN AND UNIFORM SURFACE. PLANT GROUND COVER MATERIALS, APPLY 2 INCHES OF ORGANIC MULCH, AND WATER.

MAINTENANCE & WARRANTY:

1. MAINTENANCE OF PLANT MATERIALS AND LAWN AREAS SHALL BEGIN IMMEDIATELY AFTER INSTALLATION AND SHALL CONTINUE UNTIL FINAL ACCEPTANCE, BUT IN NO CASE, LESS THAN THE FOLLOWING STATED PERIODS:

   PLANT MATERIALS: 90 DAYS AFTER SUBSTANTIAL COMPLETION
   LAWN AREAS: 60 DAYS AFTER SUBSTANTIAL COMPLETION

2. AFTER REQUIRED MAINTENANCE PERIOD, THE OWNER, UPON REQUEST, WILL MAKE AN INSPECTION TO DETERMINE ACCEPTABILITY. UNACCEPTABLE WORK SHALL BE REPAIRED OR REPLACED AND REINSPECTED BEFORE FINAL ACCEPTANCE IS GRANTED.

3. A WRITTEN WARRANTY SHALL BE PROVIDED TO THE OWNER GUARANTEEING THAT ALL PLANT MATERIALS, SOD, AND/OR SEEDED AREAS WILL BE THRIVING FOR THE FOLLOWING STATED PERIODS:

   TREES, SHRUBS, AND GROUND COVERS: ONE YEAR AFTER FINAL ACCEPTANCE
   SOD AND SEEDED AREAS: 90 DAYS AFTER FINAL ACCEPTANCE
   PERRENIALS: 90 DAYS AFTER FINAL ACCEPTANCE

4. THE CONTRACTOR SHALL PROVIDE THE OWNER WITH WRITTEN INSTRUCTIONS REGARDING MAINTENANCE OF EACH TYPE OF VEGETATION. THE OWNER IS RESPONSIBLE FOR PROPER MAINTENANCE OF THE MATERIALS DURING THE WARRANTY PERIOD AS OUTLINED IN THE MAINTENANCE INSTRUCTIONS. THE CONTRACTOR SHALL MAKE PERIODIC INSPECTIONS OF THE SITE AND WILL INFORM THE OWNER OF ANY LACK OF PROPER MAINTENANCE IN WRITING. OWNER'S FAILURE TO COMPLY WITH THE MAINTENANCE PROGRAM SHALL RENDER THE WARRANTY NULL AND VOID.

5. THE CONTRACTOR IS NOT RESPONSIBLE FOR ACTS OF NATURE INCLUDING AB-NORMAL WEATHER CONDITIONS, EROSION, VANDALISM, NOR DAMAGES BY OTHERS. IF ANY CONDITIONS BEYOND THE CONTROL OF THE CONTRACTOR SHOULD OCCUR, THE MATERIALS AFFECTED WILL NO LONGER BE COVERED BY THE WARRANTY.

SEEDBED PREPARATION:

1. ALL DISTURBED AREAS SHALL BE DRESSED TO THE TYPICAL SECTIONS AND/OR GRADES SHOWN AND PLOWED TO A DEPTH OF 5 INCHES. THE TOP 2 INCHES SHALL BE PULVERIZED TO PROVIDE A UNIFORM SEEDBED. (NOTE: LIME SHALL BE APPLIED BEFORE PLOWING OPERATION.)

2. REMOVE ALL LOOSE ROCK, ROOTS, AND OTHER DEBRIS LEAVING SURFACE REA-SONABLY SMOOTH AND UNIFORM. SOIL LEVEL SHALL BE APPROXIMATELY 1 INCH BELOW ALL TOPS OF CURBS AND WALKWAYS.

3. APPLY LIME AND FERTILIZER WITH NECESSARY EQUIPMENT TO ENSURE UNIFORM DISTRIBUTION OF THE MATERIALS. THE HAND/BUCKET METHOD IS NOT ACCEP- TABLE. THE RATES AND TYPES OF MATERIALS TO BE APPLIED ARE AS FOLLOWS:

   TURFGRADE FERTILIZER WITH SLOW RELEASE NITROGEN (E.G. 18-24-10)
   - RATE THAT WILL PROVIDE 5 LBS. OF PHOSPHORUS PER 1000 SQUARE FEET
   75 LBS. PER 1000 SQUARE FEET

   LIMESTONE - (LIMESTONE MAY BE WAIVED IF EXISTING PH IS GREATER THAN 5.5.)

4. MOISTEN PREPARED LAWN AREAS BEFORE PLANTING IF SOIL IS DRY. ALLOW SURFACE MOISTURE TO DRY BEFORE PLANTING LAWNS. DO NOT CREATE A MUDDY SOIL CONDITION.

Gries Architectural Group Inc.
500 North Commercial Street
Neenah, Wisconsin 54956
Phone: 920-722-2445 Fax: 920-722-6605
www.griesarchitectural.com

©Copyright. This Print/Computer File Is The Exclusive Property Of Gries Architectural Group, Inc. Use Only For Purpose Which Loaned. Copying Or Reproducing Is Prohibited. Return Upon Request.

A NEW BUILDING FOR:
BOYS & GIRLS CLUB OF MENASHA
MENASHA, WISCONSIN

date: 03-10-2015
job: 14-009
d. by: SMB
rev.:

L-0.2

Z:\2014\14-009 Boys and Girls Club- Menasha\REVIT\14-009 Boys and Girls Club.rvt
3/10/2015 5:06:23 PM

SITE LIGHTING FIXTURE SCHEDULE						
QTY	TYPE	DESCRIPTION	MANUFACTURER	CATALOG NUMBER	LAMP TYPE	WATTAGE
5	BA	42" BOLLARD	CREE	PWY-EDG-5M-P4-02-D-UL-BZ-350-WB	LED	22W
3	OA	SURFACE MOUNTED EXTERIOR UNDERCANOPY LIGHT	LITHONIA LIGHTING	OLCFM 15 WH	LED	17W
2	OAE	SURFACE MOUNTED EXTERIOR UNDERCANOPY LIGHT WITH EMERGENCY BACKUP	LITHONIA LIGHTING	OLCFM 15 WH	LED	17W
4	OB	EXTERIOR WALL PACK FULL CUTOFF	LITHONIA LIGHTING	WST LED 1 10A700/40K SR3 MVOLT *STD COLOR*	LED	24W
6	OBE	EXTERIOR WALL PACK FULL CUTOFF WITH EMERGENCY BACKUP	LITHONIA LIGHTING	WST LED 1 10A700/40K SR3 120 ELCW *STD COLOR*	LED	24W
12	OC	LED ACCENT LIGHT	HYDREL	4640 12 LED WHT41K MVOLT MFL ARJB IHL LP WH	LED	14W
1	OP	LED INGRADE ACCENT LIGHT	KIM LIGHTING	LTV83SS NF12L 4K UV HL	LED	14W
10	YA	SINGLE LUMINAIRE TYPE IV MED HS SHIELD POLE MTD. 15' MTG. HT.	LITHONIA LIGHTING	DSX1 LED 30C 700 40K T4M HS MVOLT SPA DDBXD / 14' POLE / 12" AFG BASE	30 LED ARRAY	68W
3	YB	SINGLE LUMINAIRE TYPE V MED POLE MTD. 15' MTG. HT.	LITHONIA LIGHTING	DSX1 LED 30C 700 40K T5M MVOLT SPA DDBXD / 14' POLE / 12" AFG BASE	30 LED ARRAY	68W

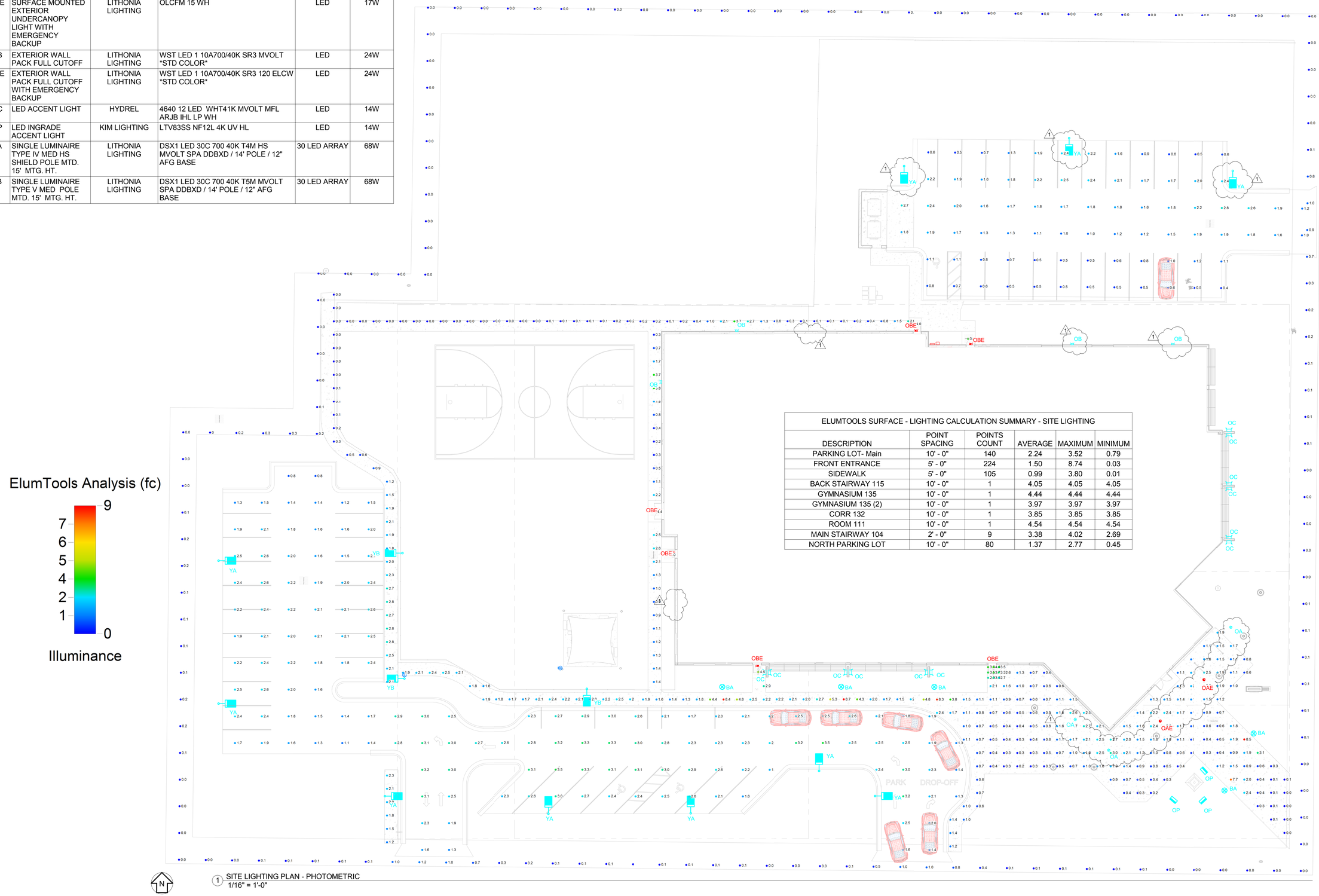

ELUMTOOLS SURFACE - LIGHTING CALCULATION SUMMARY - SITE LIGHTING					
DESCRIPTION	POINT SPACING	POINTS COUNT	AVERAGE	MAXIMUM	MINIMUM
PARKING LOT- Main	10' - 0"	140	2.24	3.52	0.79
FRONT ENTRANCE	5' - 0"	224	1.50	8.74	0.03
SIDEWALK	5' - 0"	105	0.99	3.80	0.01
BACK STAIRWAY 115	10' - 0"	1	4.05	4.05	4.05
GYMNASIUM 135	10' - 0"	1	4.44	4.44	4.44
GYMNASIUM 135 (2)	10' - 0"	1	3.97	3.97	3.97
CORR 132	10' - 0"	1	3.85	3.85	3.85
ROOM 111	10' - 0"	1	4.54	4.54	4.54
MAIN STAIRWAY 104	2' - 0"	9	3.38	4.02	2.69
NORTH PARKING LOT	10' - 0"	80	1.37	2.77	0.45

1 SITE LIGHTING PLAN - PHOTOMETRIC
1/16" = 1'-0"

C:\Revit Projects\14-009 Boys and Girls Club - Electrical_MBIGGAR.rvt

2/10/2015 9:46:02 AM

Gries
Architectural Group Inc.
500 North Commercial Street
Neenah, Wisconsin 54956
Phone: 920-722-2445 Fax: 920-722-6608
www.griesarchitectural.com

©Copyright. This Print/Computer File Is The Exclusive Property Of Gries Architectural Group, Inc. Use Only For Purpose Which Loaned. Copying Or Reproducing Is Prohibited. Return Upon Request.

A New Building For:
Boys & Girls Club of Menasha
600 Racine Street Menasha, WI

FAITH TECHNOLOGIES
ELECTRICAL CONTRACTOR
2662 American Drive, P.O. Box 627
Appleton, WI 54912-0627
(920) 725-5500 office
www.faithtechnologies.com

date: 10/01/2014
job: 1412007
d. by: MVB/NEK
rev.:

ES101P

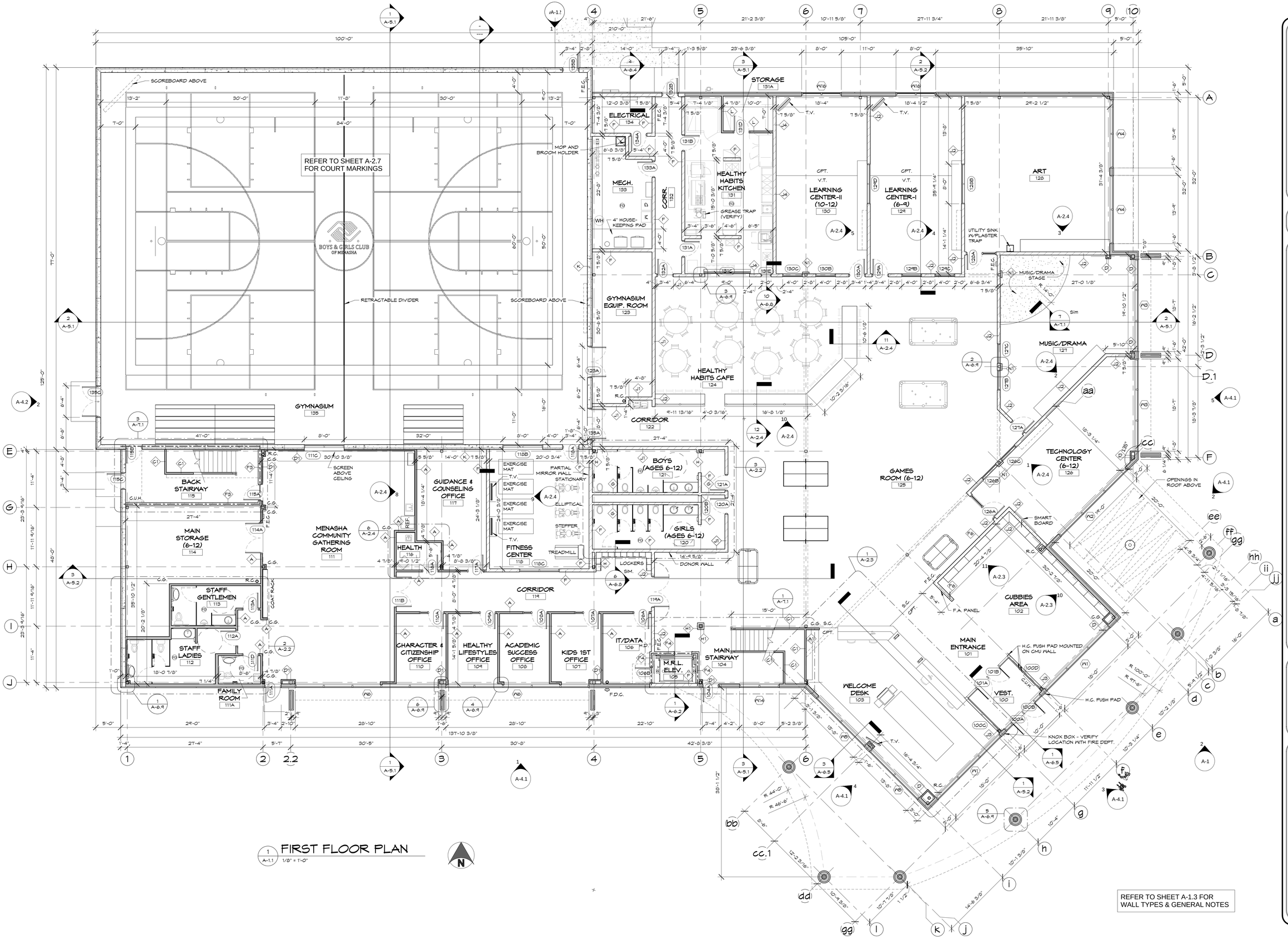

1 A-1.1 FIRST FLOOR PLAN
1/8" = 1'-0"

Z:\2014\14-009 Boys and Girls Club- Menasha\REVIT\14-009 Boys and Girls Club.rvt

3/10/2015 5:13:08 PM

Gries Architectural Group Inc.
500 North Commercial Street
Neenah, Wisconsin 54956
Phone: 920-722-2445 Fax: 920-722-6605
www.griesarchitectural.com

©Copyright. This Print/Computer File Is The Exclusive Property Of Gries Architectural Group, Inc. Use Only For Purpose Which Loaned. Copying Or Reproducing Is Prohibited. Return Upon Request.

A NEW BUILDING FOR: BOYS & GIRLS CLUB OF MENASHA

MENASHA, WISCONSIN

date:	03-10-2015
job:	14-009
d. by:	SG, SMB, MJB, LGF
rev.:	10-09-2014 ADD #1 STATE REVIEW

A-1.1

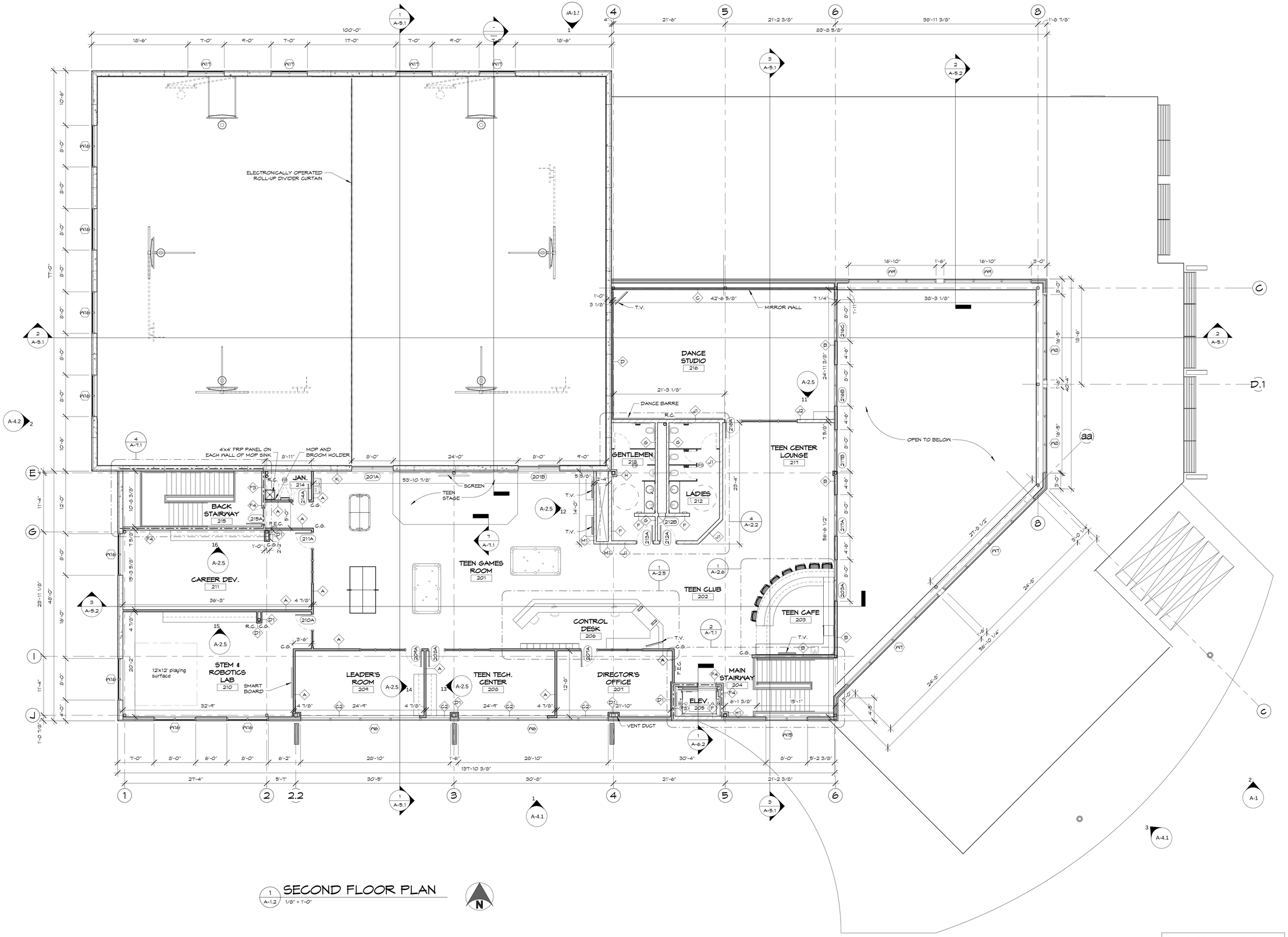

1 A-1.2 SECOND FLOOR PLAN
1/8" = 1'-0"

REFER TO SHEET A-1.3 FOR WALL TYPES & GENERAL NOTES

Gries Architectural Group Inc.
500 North Commercial Street
Neenah, Wisconsin 54956
Phone: 920-722-2445 Fax: 920-722-6605
www.griesarchitectural.com

©Copyright. This Print/Computer File Is The Exclusive Property Of Gries Architectural Group, Inc. Use Only For Purpose Which Loaned. Copying Or Reproducing Is Prohibited. Return Upon Request.

A NEW BUILDING FOR:
BOYS & GIRLS CLUB OF MENASHA
MENASHA, WISCONSIN

date: 03-10-2015
job: 14-009
d. by: SG, SMB, MJB, LCF
rev.: ---

A-1.2

Z:\2014\14-009 Boys and Girls Club- Menasha\REVIT\14-009 Boys and Girls Club.rvt
3/10/2015 5:12:20 PM

NOTE:
PREP EXPOSED CONCRETE AND APPLY CEMENTITIOUS COATING ON ALL EXPOSED CONCRETE WALLS.

CURTAIN WALL/ STOREFRONT NOTE:
PROVIDE PREFINISHED ALUMINUM SLIP HEAD TO MATCH ALUMINUM STOREFRONT/ CURTAIN WALL SYSTEM.

PROVIDE PREFINISHED EXTRUDED ALUMINUM-THERMALLY BROKEN SILL FLASHING WITH END DAMS. INSTALL WITH A POSITIVE SLOPE AWAY FROM INTERIOR AND SET IN SEALANT AND INSTALL PER MANUFACTURER'S WRITTEN SPECIFICATIONS.

PROVIDE ALL SHIMS, SEALANT & BACKER ROD PER MANUFACTURER'S SPECIFICATIONS.

KEY NOTE	MATERIAL SUMMARY
ACM-1	**ALUMINUM COMPOSITE PANEL:** MANUFACTURER: ALCOA OR EQUAL STYLE: 4MM THICK BONDED METAL PANEL W/ NON RADIUS 90° BEND. RAIN-SCREEN TYPE JOINTS: TO BE 1/2" TESTED DRY SYSTEM WITH EXTRUSIONS TO MATCH PANELS (RAIN SCREEN SYSTEM) COLOR: PURE WHITE LOCATION: EXTERIOR
ACM-2	**ALUMINUM COMPOSITE PANEL:** MANUFACTURER: ALCOA OR EQUAL STYLE: 4MM THICK BONDED METAL PANEL W/ NON RADIUS 90° BEND. RAIN-SCREEN TYPE JOINTS: TO BE 1/2" TESTED DRY SYSTEM WITH EXTRUSIONS TO MATCH PANELS (RAIN SCREEN SYSTEM) COLOR: BRIGHT SILVER METALLIC LOCATION: EXTERIOR
ACM-3	**ALUMINUM COMPOSITE PANEL:** MANUFACTURER: ALCOA OR EQUAL STYLE: 4MM THICK BONDED METAL PANEL W/ NON RADIUS 90° BEND. RAIN-SCREEN TYPE JOINTS: TO BE 1/2" TESTED DRY SYSTEM WITH EXTRUSIONS TO MATCH PANELS (RAIN SCREEN SYSTEM) COLOR: YELLOW LOCATION: EXTERIOR
CS-1	**CAST STONE PANEL:** MANUFACTURER: TBD COLOR: WHITE LOCATION: EXTERIOR
GL-1	**EXTERIOR CURTAIN WALL/STOREFRONT:** STYLE: 1" DOUBLE GLAZED, TEMPERED, PPG SOLARBAN 60, SOLAR BLUE. PROVIDE PREFINISHED EXTRUDED ALUMINUM - THERMALLY BROKEN SILL FLASHING WITH END DAMS, ON SHIM COLOR: CLEAR ANODIZED ALUMINUM LOCATION: EXTERIOR GLAZING LOCATIONS NOTE: REFER TO DOOR AND FRAME DETAILS FOR ADDITIONAL INFORMATION
GL-2	**EXTERIOR CURTAIN WALL/STOREFRONT:** STYLE: 1" DOUBLE GLAZED, TEMPERED, SPANDREL GLASS. PROVIDE PREFINISHED EXTRUDED ALUMINUM - THERMALLY BROKEN SILL FLASHING WITH END DAMS, ON SHIM COLOR: CLEAR ANODIZED ALUMINUM LOCATION: EXTERIOR GLAZING LOCATIONS NOTE: REFER TO DOOR AND FRAME DETAILS FOR ADDITIONAL INFORMATION
HMD-1	**INSULATED HOLLOW METAL DOOR** COLOR: PAINTED TO MATCH ADJACENT EXTERIOR WALL COLOR NOTES: PROVIDE INSULATED VISION GLASS AS INDICATED. REFER TO DOOR SCHEDULE FOR ADDITIONAL INFORMATION
MTL-1	**FORMED METAL COPING:** MANUFACTURER: PAC-CLAD OR UNI-CLAD STYLE: PREFINISHED METAL COPING COLOR: TO MATCH ADJACENT WALL LOCATION: PARAPET CAP
PC-1	**INSULATED PRECAST CONCRETE PANEL:** MANUFACTURER: SPANCRETE OR EQUAL FINISH: WHITE CONCRETE WITH SANDBLAST TEXTURE LOCATION: EXTERIOR ANTI-GRAFFITI SEALER FROM GRADE TO 8'
ES-1	**EQUIPMENT SCREEN:** MANUFACTURER: ENVISOR 2 OR EQUAL FINISH: TBD LOCATION: EXTERIOR - ROOF TOP

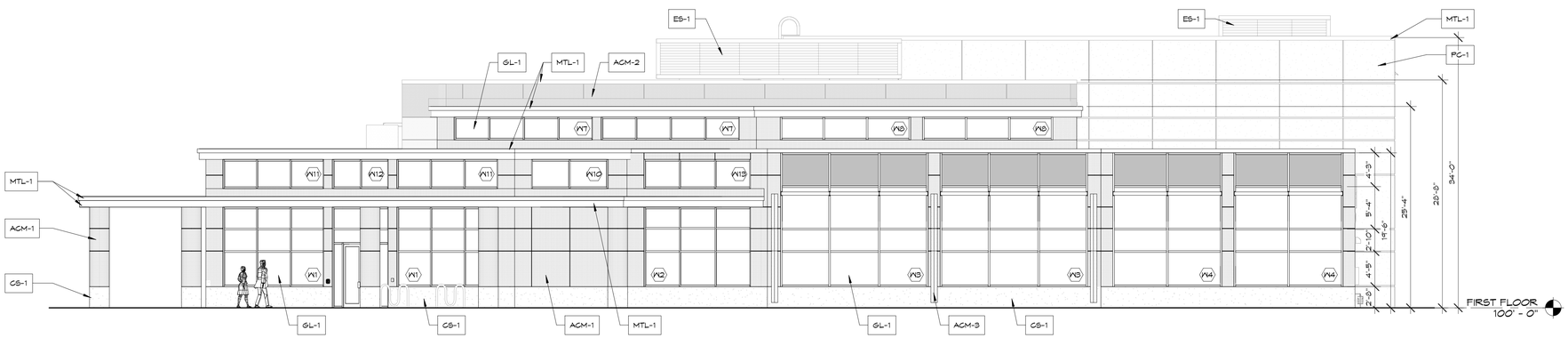

5 A-4.1 EAST ELEVATION
1/8" = 1'-0"

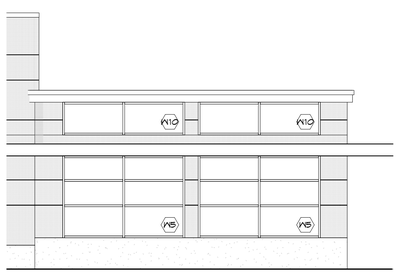

4 A-4.1 SOUTHWEST ENTRY
1/8" = 1'-0"

3 A-4.1 FRONT ENTRY
1/8" = 1'-0"

2 A-4.1 NORTHEAST ENTRY
1/8" = 1'-0"

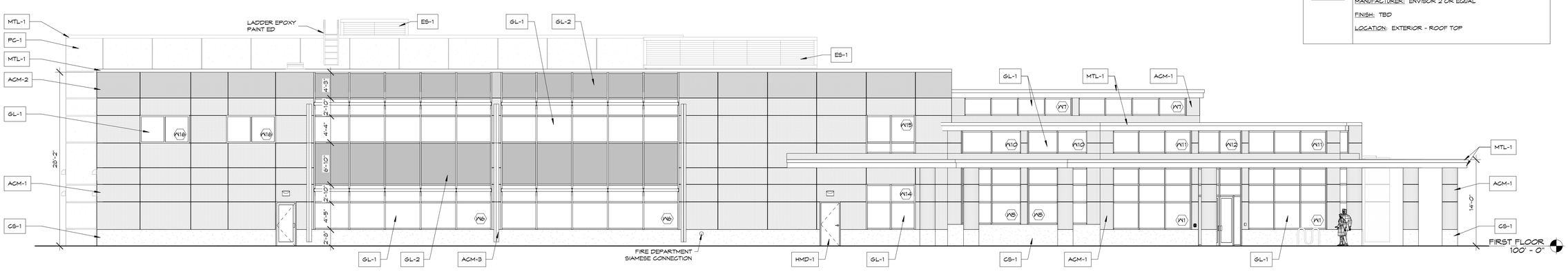

1 A-4.1 SOUTH ELEVATION
1/8" = 1'-0"

Gries
Architectural Group Inc.
500 North Commercial Street
Neenah, Wisconsin 54956
Phone: 920-722-2445 Fax: 920-722-6605
www.griesarchitectural.com

©Copyright. This Print/Computer File Is The Exclusive Property Of Gries Architectural Group, Inc. Use Only For Purpose Which Loaned. Copying Or Reproducing Is Prohibited. Return Upon Request.

A NEW BUILDING FOR:
BOYS & GIRLS CLUB OF MENASHA
MENASHA, WISCONSIN

date: 03-10-2015
job: 14-009
d. by: SG, SMB, MJB
rev.: ---

A-4.1

Z:\2014\14-009 Boys and Girls Club- Menasha\REVIT\14-009 Boys and Girls Club.rvt
3/11/2015 8:59:26 AM

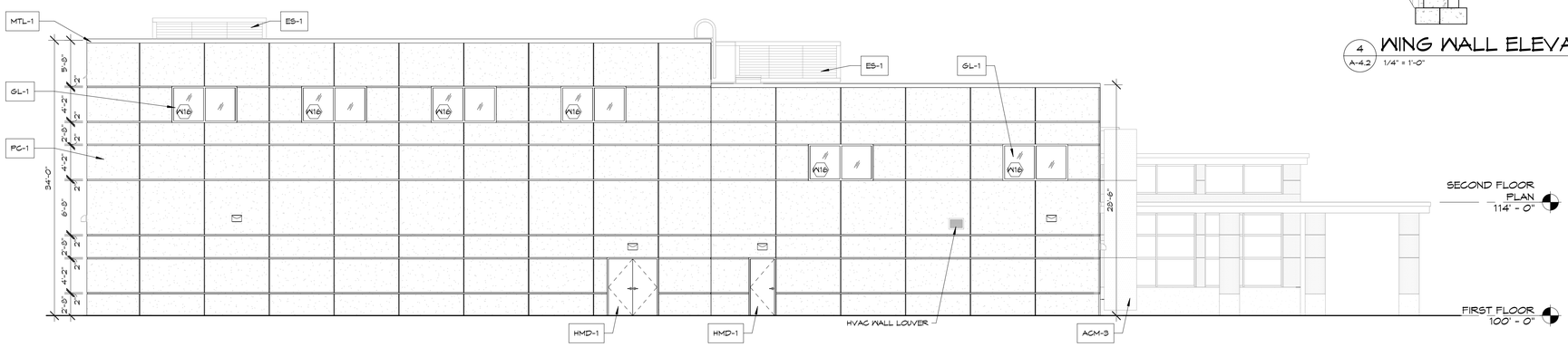

2 A-4.2 WEST ELEVATION
1/8" = 1'-0"

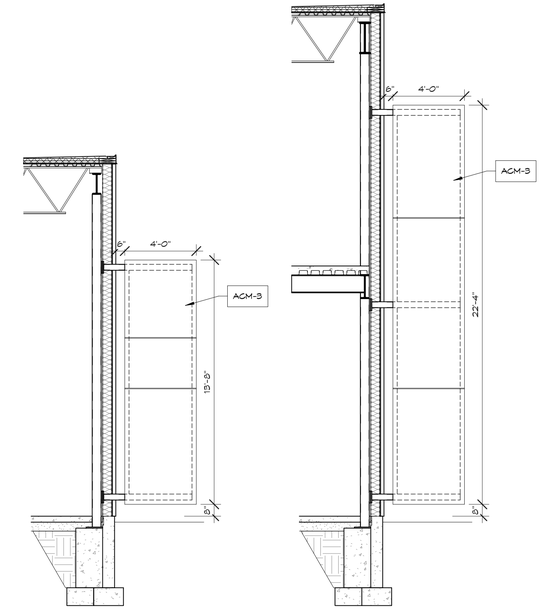

4 A-4.2 WING WALL ELEVATIONS
1/4" = 1'-0"

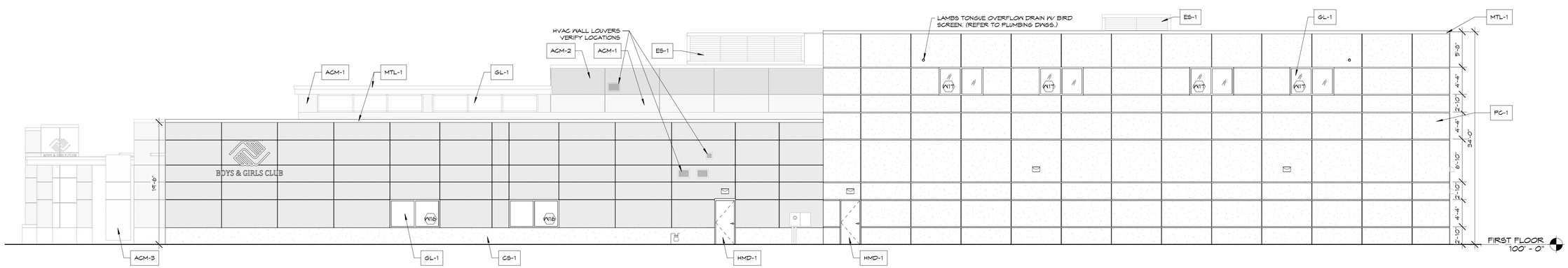

1 A-4.2 NORTH ELEVATION
1/8" = 1'-0"

Gries Architectural Group Inc.
500 North Commercial Street
Neenah, Wisconsin 54956
Phone: 920-722-2445 Fax: 920-722-6605
www.griesarchitectural.com

©Copyright. This Print/Computer File Is The Exclusive Property Of Gries Architectural Group, Inc. Use Only For Purpose Which Loaned. Copying Or Reproducing Is Prohibited. Return Upon Request.

A NEW BUILDING FOR:
BOYS & GIRLS CLUB OF MENASHA
MENASHA, WISCONSIN

date: 03-10-2015
job: 14-009
d. by: SG, SMB, MJB
rev.: ---

A-4.2

Z:\2014\14-009 Boys and Girls Club- Menasha\REVIT\14-009 Boys and Girls Club.rvt
3/11/2015 9:04:15 AM