SITE PLAN REVIEW FOR:

FAST N EASY PAWN

1275 APPLETON ROAD

CITY OF MENASHA, WISCONSIN 54952

SITE PLAN REVIEW INFORMATION & ZONNING ORDINANCE and SITE DATA ANALYSIS

I. SITE LOCATION
Fast N Easy Pawn
1275 Appleton Road
Menasha, Wisconsin 54952

II. OWNER
Dietzen Living Trust
1275 Appleton Rd.
Menasha, Wisconsin 54952
Attention: Steve Dietzen

III. SITE PLAN REVIEW INFORMATION
A. City of Menasha Site Plan Review Number: Not Applicable
B. Assigned Plan Reviewer: Greg Kiel - Director of Community Development

IV. ZONING ORDINANCES
City of Menasha
Chapter 13 - Zoning Code

V. APPLICABLE ZONING ORDINANCES and SITE DATA ANALYSIS
A. Site Zoning = C1 - General Commercial District
B. Existing / Proposed Use
Retail Trade (Household Equipment, Furniture, Appliances, Etc. Sales) = Permitted
C. Lot Size
1. Minimum Lot Size / Width = 9,500 s.f. / 80' wide
2. Existing = 29,816 s.f. (.6844 Acres) / 120' wide
D. Building Site Coverage Area
1. Existing = 6,553 s.f.
2. Building Addition = 2,400 s.f.
3. Total Building Area = 8,953 s.f.
a. Sales Area (Existing) = 4,553 s.f.
b. Heated / Cooled Storage Area (Existing) = 2,000 s.f.
c. Un-occupied & Unheated Storage Area (Proposed) = 2,400 s.f.
d. Total Building Area = 8,953 s.f.
E. Existing / Proposed Building Floor Area By Use
1. Sales Area
a. Existing Sales Area = 3,233 s.f.
b. Proposed Additional Floor Area = 1,400 s.f.
c. Total Existing / Proposed Sales Area = 4,633 s.f.
2. Storage Area
a. Existing Heated Storage Floor Area = 1,720 s.f.
b. Existing Heated Storage Floor Area to be Converted to Un-Heated / Un-Occupied Storage Floor Area = 200 s.f.
c. Proposed Un-Heated / Un-Occupied Storage Floor Area Addition = 2,400 s.f.
d. Total Storage Area = 4,320 s.f.
3. Total Floor Area = 8,953 s.f.
F. Building Lot Coverage
1. Maximum = 30% (29,816 X .3) = 8,945 s.f.
2. Existing & Proposed = 8,953 s.f. / 29816 s.f. = 30.003%
G. Building Height
1. Allowable = 45' - 3 Stories
2. Existing / Proposed = 18'
H. Building Setbacks
1. Required
a. Front Yard = 10' (Building, Parking and Paving)
b. Side Yard = 0'
c. Rear Yard = 10' (Building, Parking and Paving)
2. Existing / Proposed
a. Front Yard = 10' Paving / 70' Building (Existing - No Change)
b. Side Yard = 2' Paving / 10' Building (Existing - No Change)
c. Rear Yard = 35' Paving (Existing - No Change) / 40' Building (Proposed)

I. Employees = 3 (No New Employees Added)
1. Existing = 3
2. Future = 1
3. Total = 4
J. Parking
1. Required = 1 space per 600 s.f. of publically used floor area = (4,553 s.f. / 600 s.f.) = 8 spaces
2. Existing = 15 spaces will be provided on the existing parking lot as shown on the Site plan. No additional on site parking area is proposed.
K. Off Street Loading
1. Required = 1 space - 12' X 45'
2. Proposed = 1 space - 12' X 45' at the rear of the building.
L. Building Materials
1. Original building was built before 2000.
2. The proposed building addition is proposed to be attached to the rear side of the existing building.
3. Building addition architectural metal wall panels match existing architectural metal wall panels on the rear and side elevations.
4. The proposed building addition metal roof panels are to match the existing building metal roof panels.
M. Fire Apparatus Access
1. There is on site 20' wide or greater paved Fire Apparatus Access Lanes or paved Public Right of Ways on 3 sides of existing building and proposed building addition.
2. Dead ends of the on site fire apparatus access road do not exceed 150' in length.
3. All parts of the building exterior is within 150' of a Fire Fighting Apparatus
N. Site Surface Area Analysis
1. Disturbed Site Area = (50' X 65') = 3,250 s.f.
2. DNR Site Plan Review Not Required because disturbed area is less than 1 acre.
3. Impervious Area Analysis
a. Existing Impervious Area
i. Building Area = 6,513 s.f. (21.8%)
ii. Paved Area = 16,007 s.f. (53.7%)
iii. Total Impervious Area = 22,520 s.f. (75.5%)
b. Proposed / Existing Impervious Area
i. Building Area = 8,913 s.f. (30%)
ii. Paved Area = 14,387 s.f. (48.2%)
iii. Total Impervious Area = 23.300 s.f. (78.2%)
(780 s.f. (2.7%) increase from current conditions)
O. On Site Storm Water Drainage
1. Requirements by City of Menasha.
Maintain existing on site storm water grading drainage pattern.
2. Proposed System
a. Description
i. Proposed building addition has a gabled roof with half draining to the east north side of the site and the other half to the south side of the site.
ii. The north side of the building will have downspouts draining directly on to the paved parking area that drains off the site via the existing unchanged grading and drainage pattern.
iii. The south side of the building addition has no gutters or downspouts. The roof area drains directly onto the existing grass area that drains off the site via existing unchanged site grading and drainage pattern.

BUILDING SITE

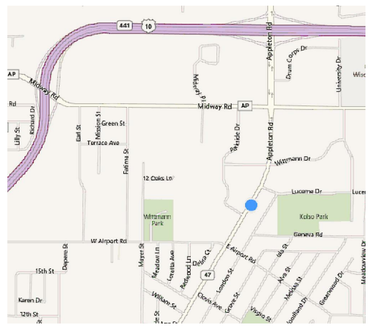

LOCATION MAP

SHEET INDEX

TS1 - TITLE SHEET
C1 - SITE PLAN
A1 - FLOOR PLAN
A2 - ELEVATIONS

RR STEEL CONSTRUCTION CO., INC.
DESIGNERS, BUILDERS, AND GENERAL CONTRACTORS
5521 COUNTY ROAD BB APPLETON WI 54914
(920) 739-6521 FAX (920) 739-3776 (800) 331-6521
"YOU WON'T BUILD ANY OTHER WAY WHEN YOU KNOW WHO WE ARE"
STATE OF WISCONSIN REGISTRATION ID NUMBER 1105412

PROPOSED BUILDING FOR:
FAST N EASY PAWN
MENASHA, WISCONSIN

PROJECT NO. 668
PLAN DATE: FEBRUARY 23, 2012
DRAWN BY: DJN

MARK	DATE	DESCRIPTION

SHEET TITLE: TITLE SHEET

SHEET: TS1

ARCHITECTURAL ABBREVIATIONS

A

A.B.	ANCHOR BOLT
AC.FLR.	ACCESS FLOOR
ACOUS.	ACOUSTIC
ADA	AMERICANS with DISABILITIES ACT
ADD.	ADDENDUM
ADDL.	ADDITIONAL
ADJ.	ADJUSTABLE
ADJ.	ADJACENT
ADMIN.	ADMINISTRATION
A.F.F.	ABOVE FINISHED FLOOR
AHU	AIR HANDLING UNIT
ALT.	ALTERNATE
ALUM.	ALUMINUM
AMEND.	AMENDMENT
ANNUN.	ANNUNCIATOR
AP	ACCESS PANEL
APPROX.	APPROXIMATE
ARCH.	ARCHITECTURAL
ATC	ACOUSTIC TILE CEILING
AUTO.	AUTOMATIC

B

BUL.BD.	BULLETIN BOARD
BD.	BOARD
BG	BUMPER GUARD
BIT.	BITUMINOUS
BKT.	BRACKET
BLDG.	BUILDING
BLKG.	BLOCKING
BM.	BEAM
BOT.	BOTTOM
BRG.	BEARING
BSMT.	BASEMENT
BUL.	BULLETIN

C

CAB.	CABINET
CCTV	CLOSED CIRCUIT TELEVISION
CD	COILING DOOR
CEIL.	CEILING
CG	CORNER GUARD
CH	COAT HOOK
C.J.	CONSTRUCTION JOINT
CLG.	CEILING
CLR.	CLEAR
CM	CONSTRUCTION MANAGER
CMU	CONCRETE MASONRY UNITS
CO	CLEAN-OUT
COL.	COLUMN
COMB.	COMBINATION
CONC.	CONCRETE
CONF.	CONFERENCE
CONN.	CONNECTION
CONST.	CONSTRUCTION
CONT.	CONTINUOUS
CONTR.	CONTRACTOR
COORD.	COORDINATE
CORR.	CORRIDOR
CPT.	CARPET
CT	CERAMIC TILE
CTR.	CENTER
CTSK.	COUNTERSINK
CUH	CABINET UNIT HEATER
CW	COLD WATER
CYL.	CYLINDER

D

DEMO.	DEMOLITION
DEPR.	DEPRESSION
DEPT.	DEPARTMENT
DTLS.	DETAILS
DF	DRINKING FOUNTAIN
DIA.	DIAMETER
DIAG.	DIAGONAL
DIFF.	DIFFUSER
DIM.	DIMENSION
DISP.	DISPENSER
DIST.	DISTRIBUTION
DIV.	DIVISION
DN	DOWN
DP.	DEEP
DR.	DOOR
DR.	DRIVE
DS	DOWNSPOUT
DW	DISHWASHER
DWG.	DRAWING
DWLS.	DOWELS

E

E	ELECTRIC
EA	EXHAUST-AIR
EA.	EACH
EC	ELECTRICAL CABINET
EF	EXHAUST FAN
EL.	ELEVATOR
ELEC.	ELECTRICAL
ELEV.	ELEVATION
EMERG.	EMERGENCY
ENCL.	ENCLOSURE
ENTR.	ENTRANCE
EO	ELECTRICAL OUTLET
EP	ELECTRIC PANEL
EQ.	EQUAL
EQUIP.	EQUIPMENT
EWC	ELECTRIC WATER COOLER
EX.	EXISTING
EXC.	EXCAVATE
EXH.	EXHAUST
EXIST.	EXISTING
EXP.	EXPANSION
EXT.	EXTERIOR

F

FA	FIRE ALARM
FB	FIRE BLANKET
FD	FIRE DAMPER
FD	FLOOR DRAIN
FDN.	FOUNDATION
FE	FIRE EXTINGUISHER
FEC	FIRE EXTINGUISHER CABINET
FH	FIRE HYDRANT
FHC	FIRE HOSE CABINET
FIN.	FINISH
FIXT.	FIXTURE
FLR.	FLOOR
FLASH.	FLASHING
FLEX.	FLEXIBLE
FLG.	FLANGE
FLUOR.	FLUORESCENT
FM	FACTORY MUTUAL
FP	FIREPROOF
FRMG.	FRAMING
FS	FLOOR SINK
FT.	FOOT/FEET
FTG.	FOOTING
FTN.	FOUNTAIN
FUT.	FUTURE

G

G	GAS
GA.	GAUGE
GALV.	GALVANIZED
GB	GRAB BAR
GBC	GENERAL BUILDING CONTRACTOR
GEN.	GENERAL
GENER.	GENERATOR
GL.	GLASS
GR.	GRADE
GYP.	GYPSUM

H

H.	HIGH
HB	HOSE BIBB
HD	HAND DRYER
HDCP.	HANDICAP
HDR.	HEADER
HDWD.	HARDWOOD
HDWR.	HARDWARE
HGT.	HEIGHT
HM	HOLLOW METAL
HORIZ.	HORIZONTAL
HTR.	HEATER
HVAC	HEATING VENTILATING AIR-CONDITIONING
HW	HOT WATER

I

I.D.	INSIDE DIAMETER
IN.	INCH
INSUL.	INSULATION
INT.	INTERIOR
ISO.	ISOLATION

J

JAN.	JANITOR
JB	JUNCTION BOX
JST.	JOIST
JT.	JOINT

K

KO	KNOCK OUT
KS	KNEE SPACE
KW	KILOWATT

L

L.	LAVATORY
LAM.	LAMINATE
LAV.	LAVATORY
LB.	POUND
LIN.	LINEAR
LKR.	LOCKER
LL	LEAD LINED
LLH	LONG LEG HORIZONTAL
LLV	LONG LEG VERTICAL
LP	LIGHT POLE
LVR.	LOUVER

M

MAN.	MANUAL
MATL.	MATERIAL
MAX.	MAXIMUM
MECH.	MECHANICAL
MEMB.	MEMBRANE
MTL.	METAL
MEZZ.	MEZZANINE
MFG.	MANUFACTURING
MFR.	MANUFACTURER
MH	MANHOLE
MIN.	MINIMUM
MIR.	MIRROR
MISC.	MISCELLANEOUS
M.O.	MASONRY OPENING
MTD.	MOUNTED

N

N/A	NOT APPLICABLE
NEC	NATIONAL ELECTRIC CODE
NIC	NOT IN CONTRACT
NO.	NUMBER
NOM.	NOMINAL
NRC	NOISR REDUCTION COEFFICIENT
NTS	NOT TO SCALE

O

O.C.	ON CENTER
O.D.	OUTSIDE DIAMETER
OFF.	OFFICE
OH.	OVERHEAD
OPER.	OPERATOR
OPNG.	OPENING
OPP.	OPPOSITE
ORD	OVERFLOW ROOF DRAIN

P

PART.	PARTITION
PB	PASS BOX
PC	PRECAST
PD	PENCIL DRAWER
PH	PANIC HARDWARE
PL.	PLATE
PLAM.	PLASTIC LAMINATE
PLAS.	PLASTIC
PLAST.	PLASTER
PLMB.	PLUMBING
PLWD.	PLYWOOD
PNL.	PANEL
PP	POWER POLE
PR.	PAIR
PRELIM.	PRELIMINARY
PRV	POWER ROOF VENTILATOR
PTN.	PARTITION
PVC	POLYVINYL CHLORIDE

Q

QT	QUARRY TILE

R

R	RADIUS
R.	RISER
RA	RETURN-AIR
RD	ROOF DRAIN
REBAR	REINFORCING ROD
REC.	RECESSED
REF.	REFERENCE
REFRIG.	REFRIGERATOR
REINF.	REINFORCING
REQD.	REQUIRED
RET.	RETAINING
REV.	REVISION
RH	ROOF HATCH
RM.	ROOM
RO	ROUGH OPENING
R&S	ROD AND SHELF

S

S.	SINK
SCHED.	SCHEDULE
SD	SMOKE DAMPER
SECT.	SECTION
SF	SQUARE FOOT/FEET
SH.	SHELF
SHR.	SHOWER
SHT.	SHEET
SHTG.	SHEATHING
SIM.	SIMILAR
SPEC.	SPECIFICATION
SQ.	SQUARE
SS	STAINLESS STEEL
SS	STORM SEWER
ST.	STAINLESS
ST.	STREET
STD.	STANDARD
STL.	STEEL
STOR.	STORAGE
STRUCT.	STRUCTURAL
STWD.	SOFTWOOD
SUPV.	SUPERVISOR
SUSP.	SUSPENDED
SW.	SWITCH

T

T	TOILET
T.	TREAD
TAN.	TANGENT
TB	TELEPHONE BOX
TC	TIME CLOCK
TEL.	TELEPHONE
TEMP.	TEMPERED
TEMP.	TEMPERATURE
TERR.	TERRAZZO
T&G	TONGUE AND GROOVE
THRES.	THRESHOLD
TLT.	TOILET
TRANS.	TRANSFORMER
TS	TUBE STEEL
TV	TELEVISION
TYP.	TYPICAL

U

UC	UNDERCUT
UCR	UNDERCOUNTER REFRIGERATOR
UL	UNDERWRITERS LABORATORIES
UNFIN.	UNFINISHED
UNO	UNLESS NOTED OTHERWISE
UR.	URINAL
UTIL.	UTILITY

V

V	VENT
VCT	VINYL COMPOSITION TILE
VENT.	VENTILATION
VERT.	VERTICAL
VEST.	VESTIBULE
VNL.	VINYL
VTR	VENT THROUGH ROOF
VWC	VINYL WALL COVERING

W

W.	WIDE
W/	WITH
W/O	WITHOUT
WC	WATER CLOSET
WD.	WOOD
WDW.	WINDOW
WF	WIDE FLANGE
WGT.	WEIGHT
W.H.	WATER HEATER
WHCR.	WHEELCHAIR
WP	WATERPROOF
WS	WEATHERSTRIP
WSCT.	WAINSCOT
W.W.F.	WELDED WIRE MESH

X

XFMR.	TRANSFORMER

Y

YD.	YARD

<	ANGLE
@	AT
CL	CENTER LINE
[	CHANNEL

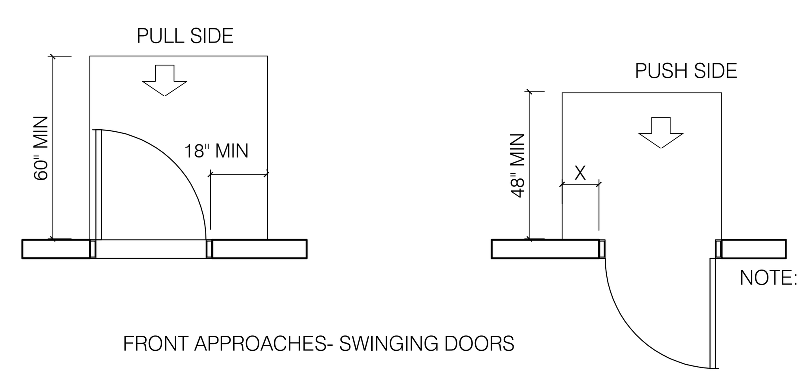

NOTE: X= 12 IN(305) IF DOOR HAS BOTH CLOSER AND LATCH

FRONT APPROACHES- SWINGING DOORS

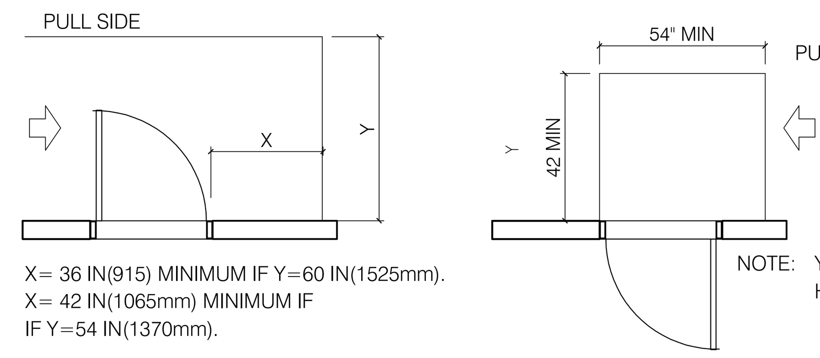

X= 36 IN(915) MINIMUM IF Y=60 IN(1525mm).
X= 42 IN(1065mm) MINIMUM IF
IF Y=54 IN(1370mm).

NOTE: Y= 48 IN(1220mm) MINIMUM IF DOOR HAS BOTH A LATCH AND CLOSER.

HINGE SIDE APPROACHES- SWINGING DOORS

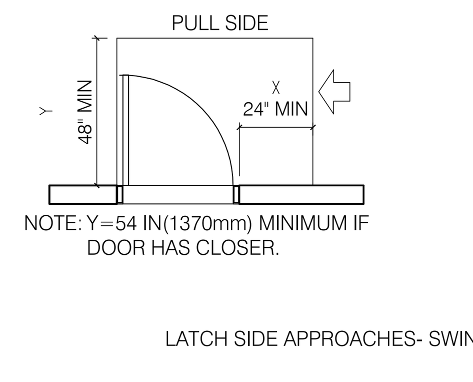

NOTE: Y=54 IN(1370mm) MINIMUM IF DOOR HAS CLOSER.

NOTE:Y= 48 IN(1220mm) MINIMUM IF DOOR HAS CLOSER.

LATCH SIDE APPROACHES- SWINGING DOORS

NOTE: ALL DOORS IN ALCOVES SHALL COMPLY WITH THE CLEARANCE FOR FRONT APPROACHES

MANEUVERING CLEARANCES AT DOORS

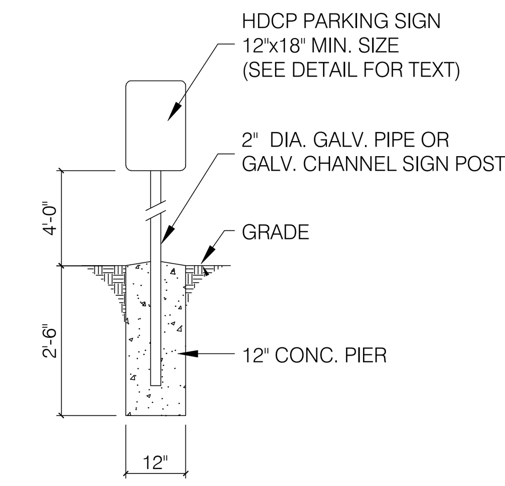

SIGN POST DETAIL

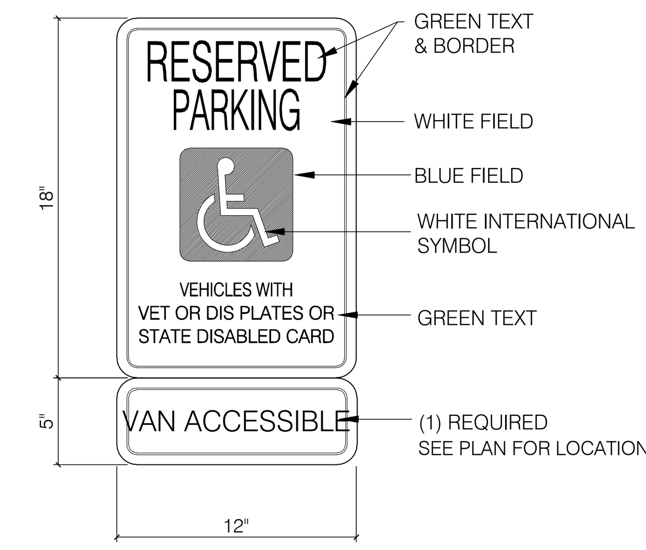

PARKING SIGN DETAIL

INTRERNATIONAL SYMBOL OF ACCESSIBILITY

HANDICAP PARKING SIGN DETAILS

NOT TO SCALE

IT SHALL BE THE RESPONSIBILITY OF THE OWNER TO INSTALL (WHERE SHOWN HEREON), BARRIER FREE PARKING SIGNS IN CONFORMITY TO WISCONSIN ADMINISTRATIVE CODE: TRANS #200.07

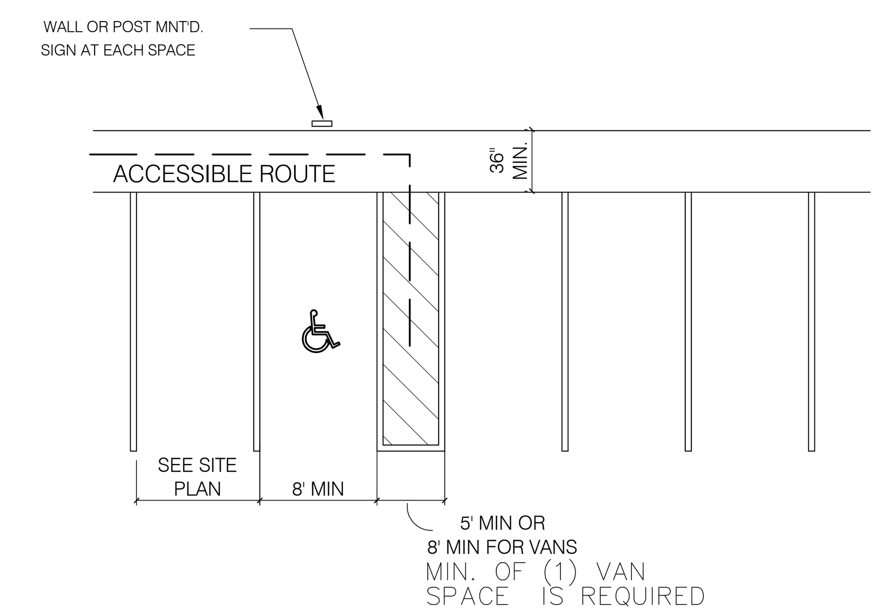

HANDICAPPED PARKING SPACES

THE MAXIMUM. SLOPE AT PARKING SPACES IS 1:50 (4.6.2)

4.8.1* GENERAL. ANY PART OF AN ACCESSIBLE ROUTE WITH A SLOPE GREATER THAN 1:20 SHALL BE CONSIDERED A RAMP AND SHALL COMPLY WITH 4.8.

4.8.2* SLOPE AND RISE. THE LEAST POSSIBLE SLOPE SHALL BE USED FOR ANY RAMP. THE MAXIMUM SLOPE OF A RAMP IN NEW CONSTRUCTION SHALL BE 1:12. THE MAXIMUM RISE FOR ANY RUN SHALL BE 30 IN.(760mm) (SEE FIG. 16). CURB RAMPS AND RAMPS TO BE CONSTRUCTED ON EXISTING SITES OR IN EXSISTING BUILDINGS OF FACILITIES MAT HAVE SLOPES AND RISES AS ALLOWED IN 4.1.6(3)(A) IF SPACE LIMITATIONS PROHIBIT THE USE OF A 1:12 SLOPE OR LESS.

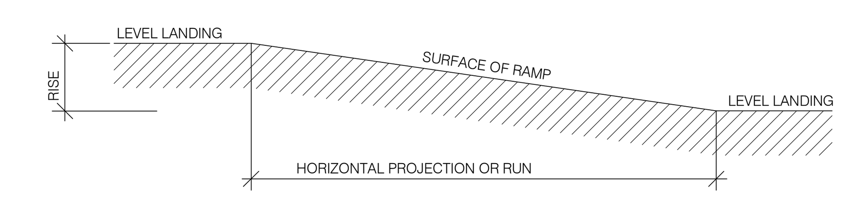

SLOPE	MAXIMUM RISE IN.	MAXIMUM HORIZONTAL PROJECTION FT.
1:12 TO 1:16	30	30
1:16 TO 1:20	30	40

SINGLE RAMP RUN

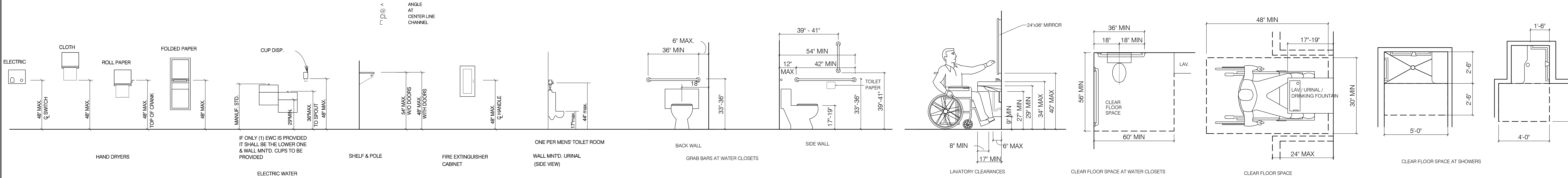

TOILET & BUILDING ACCESSORIES MOUNTING HEIGHTS AND CLEARANCES

SCALE: 1/4"=1'-0"

RR STEEL
CONSTRUCTION CO., INC.
DESIGNERS, BUILDERS,
AND GENERAL CONTRACTORS
5521 COUNTY ROAD BB APPLETON, WI 54914
(920) 739-6521 FAX (920) 739-3776 (800) 331-6521
"YOU WON'T BUILD ANY OTHER WAY WHEN YOU KNOW WHO WE ARE"
STATE OF WISCONSIN REGISTRATION ID NUMBER 1105412

PROPOSED BUILDING FOR:
FAST N EASY PAWN
MENASHA, WISCONSIN

PROJECT NO. 668
PLAN DATE: FEBRUARY 23, 2012
DRAWN BY: DJN

MARK	DATE	DESCRIPTION

SHEET TITLE: GENERAL NOTES

SHEET: G1

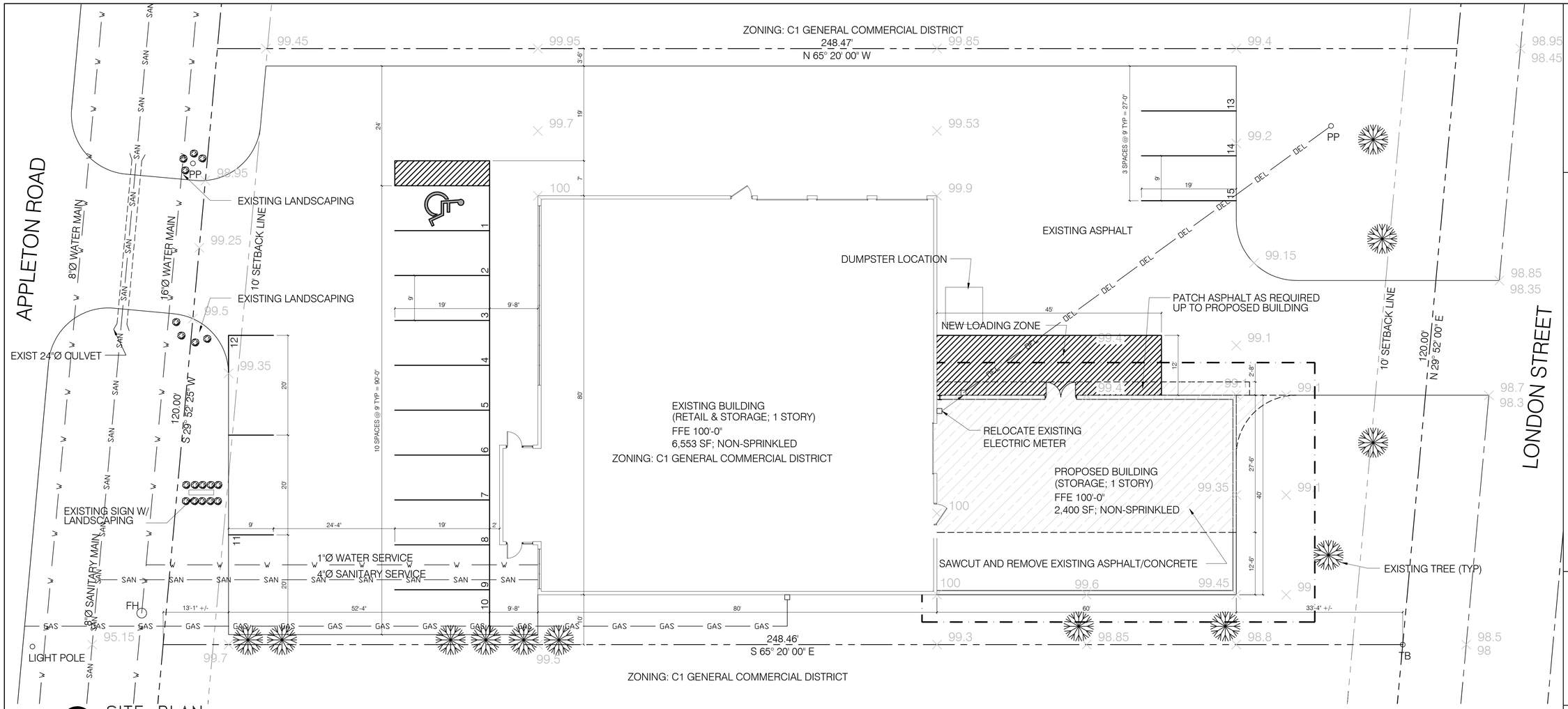

SITE PLAN

SCALE: 1"=10'-0"

GENERAL NOTES:

1. TRENCH SHALL BE A MIN. OF 4" WIDE AND 6" DEEP TO BURY AND ANCHOR THE GEOTEXTILE FABRIC. FOLD MATERIAL TO FIT TRENCH AND BACKFILL AND COMPACT TRENCH WITH EXCAVATED SOIL.
2. WOOD POSTS SHALL BE A MIN. SIZE OF 1 1/8" x 1 1/8" OF OAK OR HICKORY.
3. CONSTRUCT SILT FENCE FROM A CONTINUOUS ROLL IF POSSIBLE BY CUTTING LENGTHS TO AVOID JOINTS. IF A JOINT IS NECESSARY USE ONE OF THE FOLLOWING TWO METHODS:
   A.) TWIST METHOD - OVERLAP THE END POSTS AND TWIST OR ROTATE, AT LEAST 180 DEGREES.
   B.) HOOK THE END OF EACH SILT FENCE LENGTH.

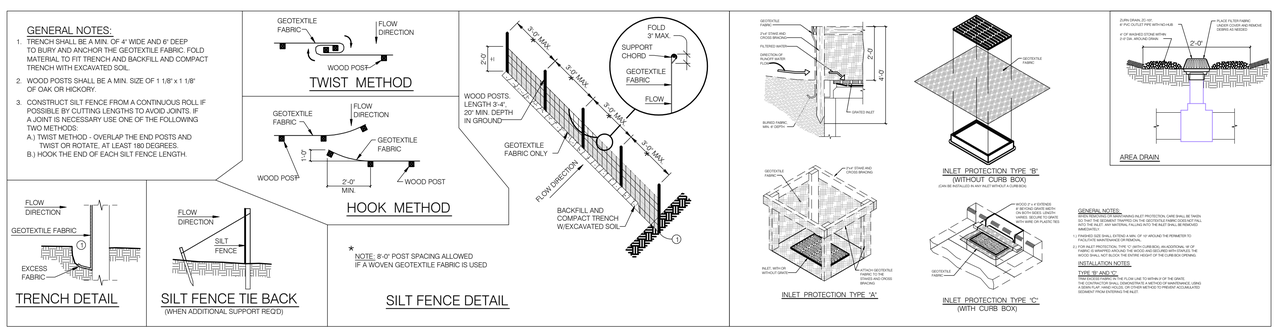

* NOTE: 8'-0" POST SPACING ALLOWED IF A WOVEN GEOTEXTILE FABRIC IS USED

LEGEND

— · — · —	SILT FENCE
× 100	EXISTING SPOT GRADE
— W —	EXISTING WATER LINE
— SAN —	EXISTING SANITARY LINE
— GAS —	EXISTING GAS LINE
— OEL —	EXISTING OVERHEAD ELECTRIC
PP	POWER POLE
TB	TELEPHONE BOX

EXISTING LANDSCAPING TO REMAIN AS IS PER LANDSCAPE PLAN APPROVED BY CITY OF MENASHA ON MARCH 30, 2009

RR STEEL CONSTRUCTION CO., INC.
DESIGNERS, BUILDERS, ARCHITECTURAL CONTRACTORS
5521 COUNTY ROAD BB APPLETON WI 54914
(920) 739-6521 FAX (920) 739-3776 (800) 331-6521
"YOU WON'T BUILD ANY OTHER WAY WHEN YOU KNOW WHO WE ARE"
STATE OF WISCONSIN REGISTRATION ID NUMBER: 1135412

PROPOSED BUILDING FOR:

FAST N EASY PAWN

MENASHA, WISCONSIN

PROJECT NO. 668
PLAN DATE: FEBRUARY 23, 2012
DRAWN BY: DJN

MARK	DATE	DESCRIPTION

SHEET TITLE: SITE PLAN

SHEET: C1

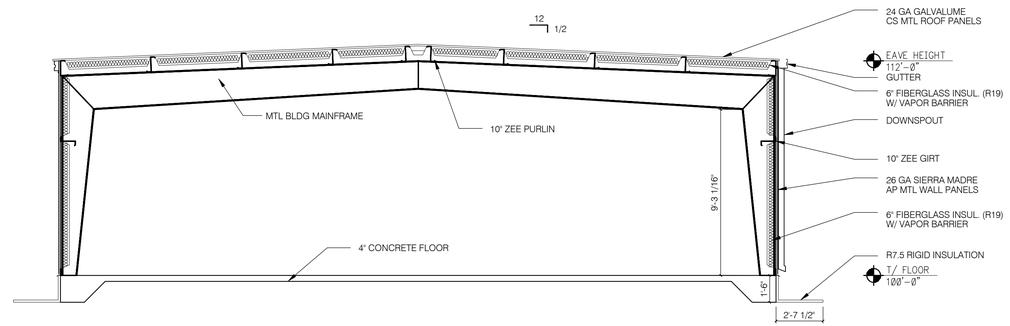

A
A1

BUILDING SECTION

SCALE: 1/4"=1'-0"

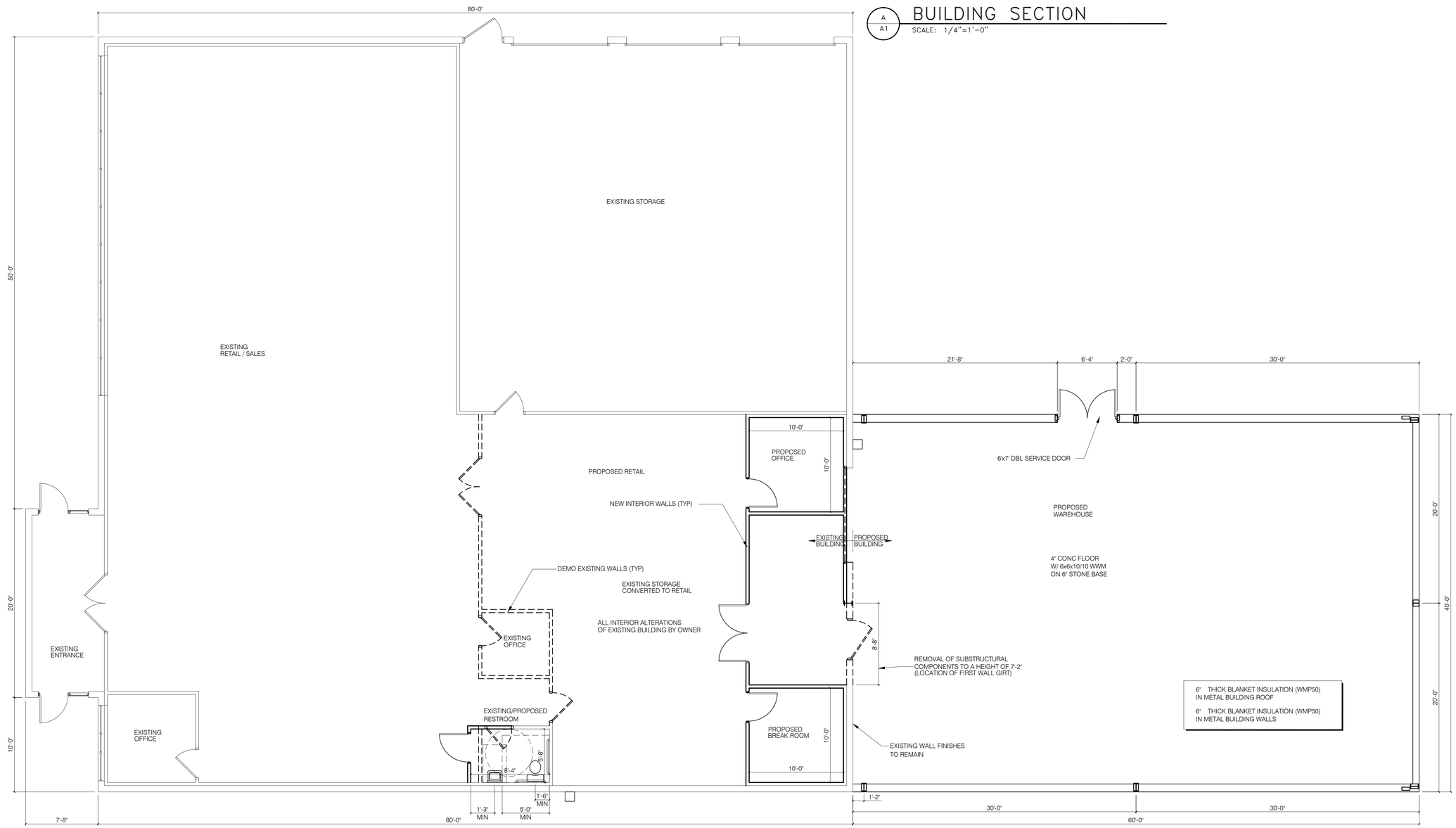

FLOOR PLAN

SCALE: 3/16"=1'-0"

RR STEEL
CONSTRUCTION CO., INC.
DESIGNERS, BUILDERS,
AND GENERAL CONTRACTORS
5521 COUNTY ROAD BB APPLETON WI 54914
(920) 739-6521 FAX (920) 739-3776 (800) 331-6521
"YOU WON'T BUILD ANY OTHER WAY WHEN YOU KNOW WHO WE ARE"
STATE OF WISCONSIN REGISTRATION ID NUMBER 1105412

PROPOSED BUILDING FOR:

FAST N EASY PAWN

MENASHA, WISCONSIN

PROJECT NO. 668

PLAN DATE: FEBRUARY 23, 2012

DRAWN BY: DJN

MARK	DATE	DESCRIPTION

SHEET TITLE: FLOOR PLAN

SHEET: A1

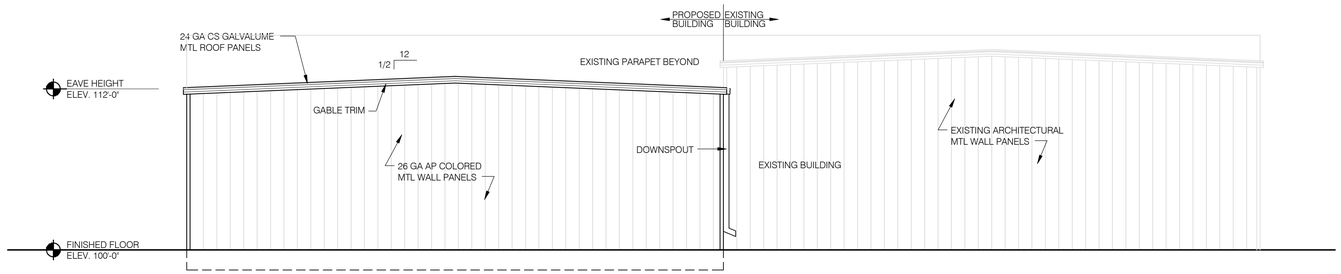

EAST ELEVATION

SCALE: 3/16"=1'-0"

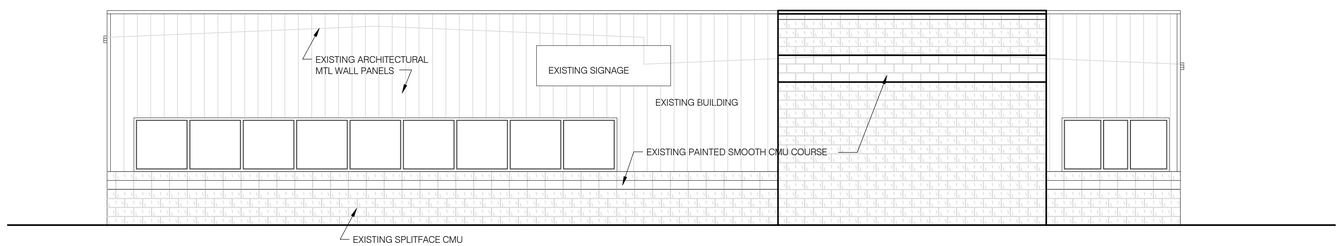

WEST ELEVATION

SCALE: 3/16"=1'-0"

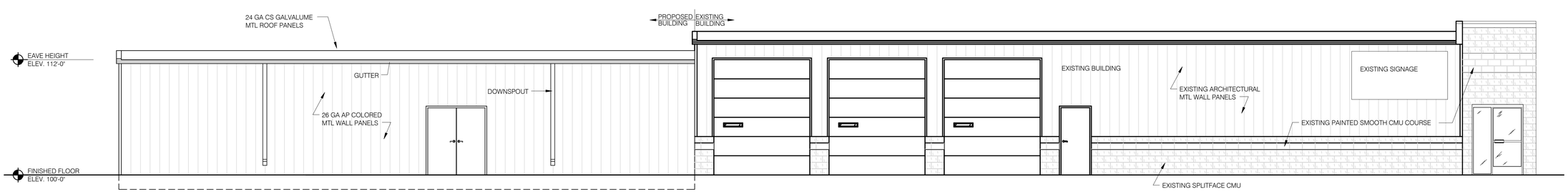

NORTH ELEVATION

SCALE: 3/16"=1'-0"

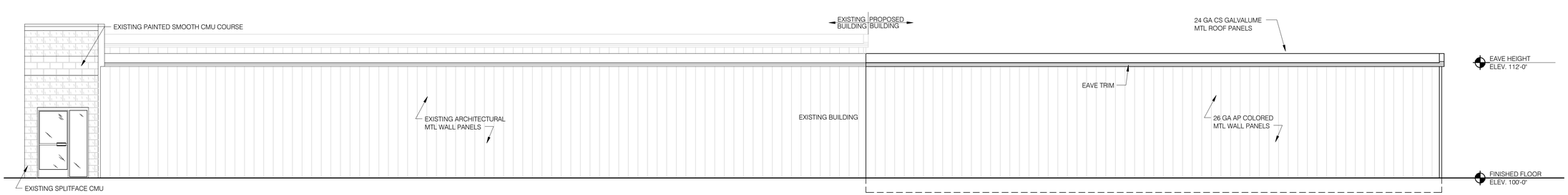

SOUTH ELEVATION

SCALE: 3/16"=1'-0"

RR STEEL CONSTRUCTION CO., INC.
DESIGNERS, BUILDERS, AND GENERAL CONTRACTORS
5521 COUNTY ROAD BB APPLETON, WI 54914
(920) 739-6521 FAX (920) 739-3776 (800) 331-6521
"YOU WON'T BUILD ANY OTHER WAY WHEN YOU KNOW WHO WE ARE"
STATE OF WISCONSIN REGISTRATION ID NUMBER 1105412

PROPOSED BUILDING FOR:

FAST N EASY PAWN

MENASHA, WISCONSIN

PROJECT NO. 668

PLAN DATE: FEBRUARY 23, 2012

DRAWN BY: DJN

MARK	DATE	DESCRIPTION

SHEET TITLE: ELEVATIONS

SHEET: A2