SUBWAY - MIDWAY ROAD: OVERALL SITE PLAN

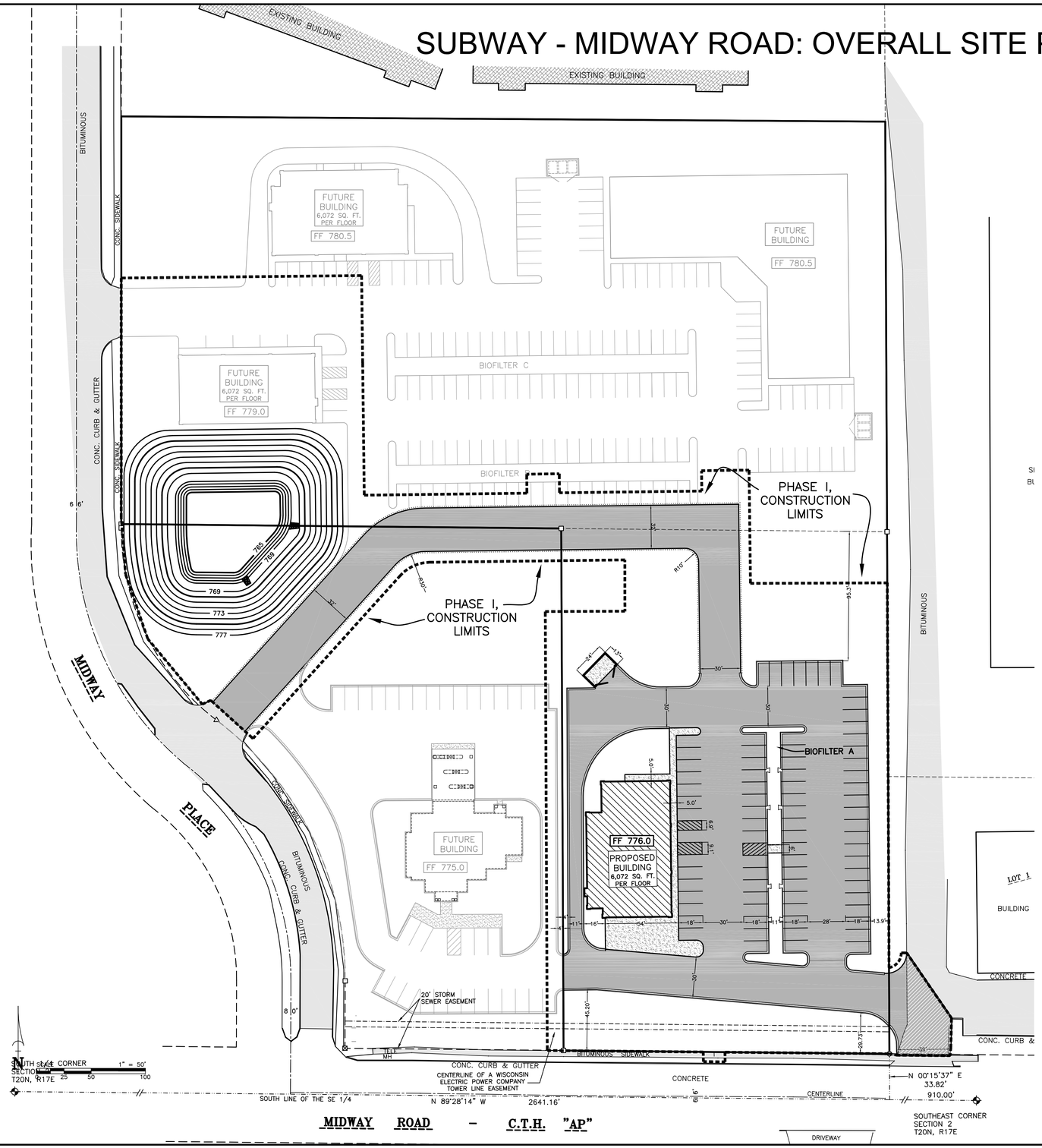

VICINITY MAP

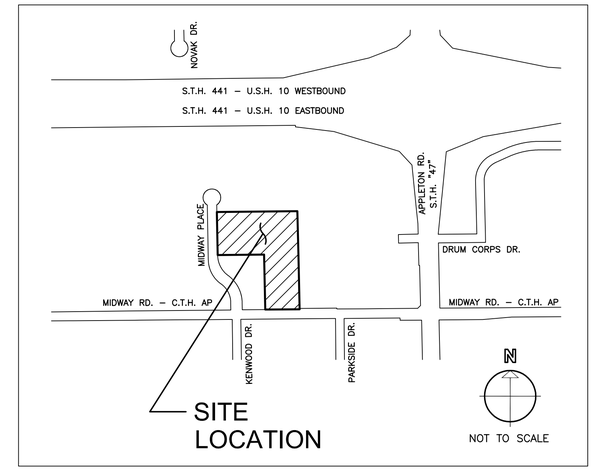

TOPOGRAPHIC LEGEND

■	1" x 18" IRON PIPE SET	—OH—	OVERHEAD POWER LINES	◇◇	GAS VALVE
★	1–1/4" x 30" REBAR SET	—E—E—	UNDERGROUND ELECTRIC	○	EXIST STORM MANHOLE
×	CHISELED "X" SET	—T—T—	UNDERGROUND TELEPHONE		STORM INLET
○	3/4" REBAR FOUND	—FIBER—	UNDERGROUND FIBEROPTIC		YARD DRAIN
□	1" IRON PIPE FOUND	—G—G—	UNDERGROUND GAS		EXIST SANITARY MANHOLE
△	1–1/4" REBAR FOUND	—CATV—	UNDERGROUND CABLE TV		EXIST. SAN. SEWER
	2" IRON PIPE FOUND	—X—X—	EXIST. FENCE LINE		EXIST. STO. SEWER
	CHISELED "X" FOUND		SIGN		EXIST. WATER MAIN
	GOVERNMENT CORNER		POWER POLE	800.00	EXIST. SPOT ELEVATION
( )	RECORDED AS		GUY		
	CONIFEROUS TREE		LIGHT POLE	800	CONTOUR W/ ELEVATION
	DECIDUOUS TREE		TELEPHONE PEDESTAL	800.00tc	EXIST. TOP OF CURB ELEV.
	EXIST. WOODS LINE		ELECTRIC PEDESTAL	800.00fl	EXIST. FLOW LINE ELEV.
	WETLANDS		CABLE PEDESTAL	FF = 800.00	FIRST FLOOR = 800.00
	SOIL BORING		EXIST. HYDRANT		TOPSOIL DEPTH
			WATER VALVE		INFILTRATION SOIL BORING
			WATER STOP BOX		

Martenson & Eisele, Inc.
1377 Midway Road
Menasha, WI 54952
www.martenson-eisele.com
info@martenson-eisele.com
920.731.0381 1.800.236.0381
Planning
Environmental
Surveying
Engineering
Architecture

DRAWN BY	CHECKED	APPROVED
asm		

NO.	DATE	REVISION
1	04/30/10	Revisions Per Meeting w/Brian 04/28/10
2	08/24/10	Add north road connection

OVERALL SITE PLAN
SUBWAY - MIDWAY ROAD

CITY OF MENASHA, WINNEBAGO COUNTY, WISCONSIN

SCALE	DATE
1" = 40'	04/16/10

COMPUTER FILE
Q:\264363a\Design\264363a.dwg

DRAWING NO.
C1.0

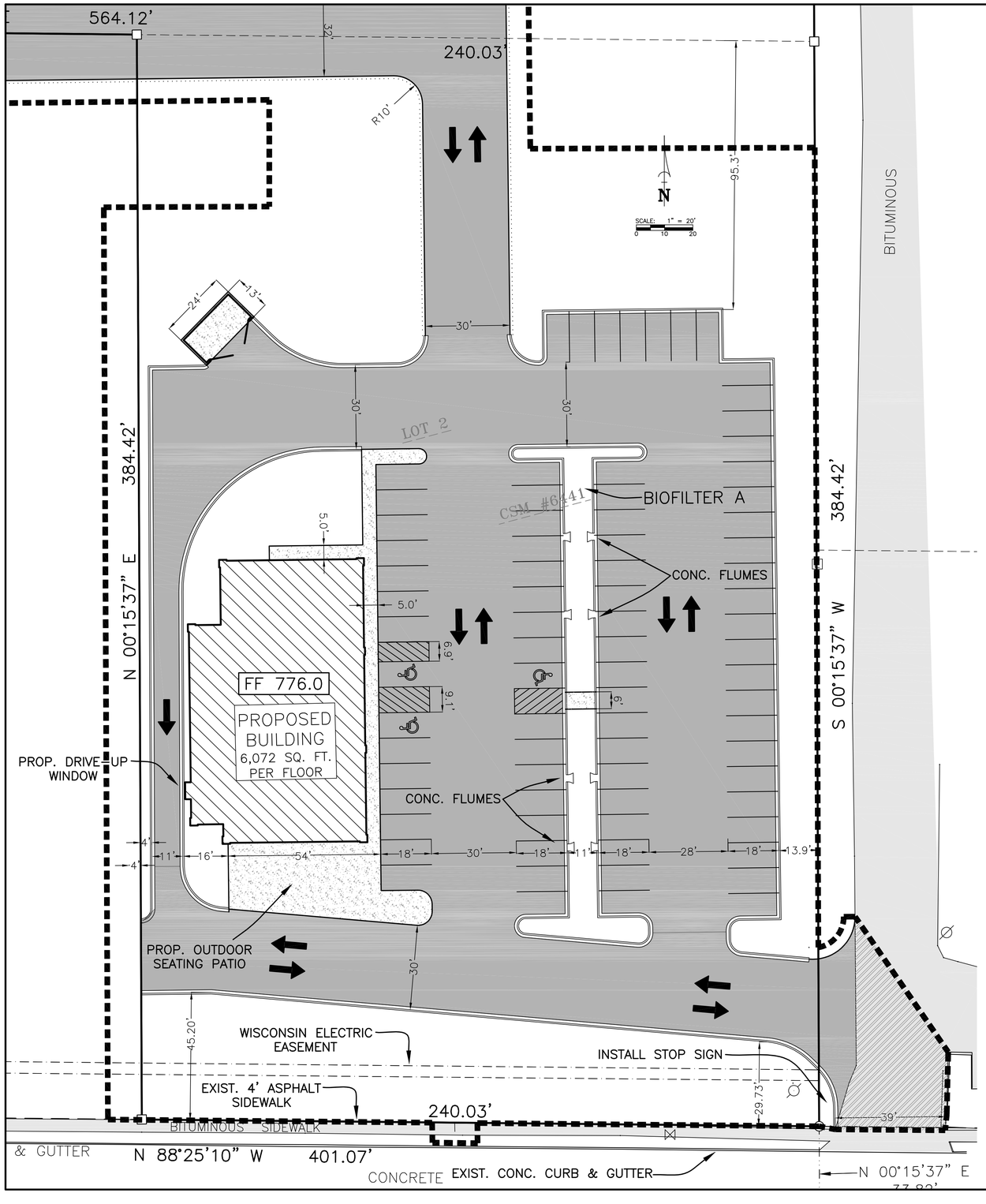

SUBWAY - MIDWAY ROAD: SITE PLAN

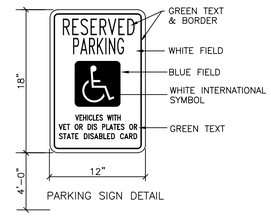

PARKING SIGN DETAIL

INTERNATIONAL SYMBOL OF ACCESSIBILITY

HANDICAP PARKING SIGN DETAILS

NOT TO SCALE
IT SHALL BE THE RESPONSIBILITY OF THE OWNER TO INSTALL (WHERE SHOWN HEREON), BARRIER FREE PARKING SIGNS IN CONFORMITY TO WISCONSIN ADMINISTRATIVE CODE: TRANS #200.07

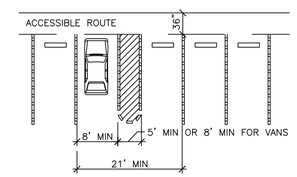

HANDICAPPED PARKING SPACES

OWNER
BMG PROPERTIES
ATTN: BRIAN GAJEWSKI
1526 S. COMMERCIAL ST.
NEENAH, WI 54952
(920) 810-1901

ARCHITECT/CONTRACTOR
UNITED BUILDING SYSTEMS
ATTN: PAUL WENNINGER
W1988 LINSMEYER ROAD
SEYMOUR, WI 54165
(920) 833-1700

ENGINEER/SURVEYOR
MARTENSON & EISELE, INC
ATTN: AARON MADSEN, P.E.
GARY ZAHRINGER, P.L.S.
1377 MIDWAY ROAD
MENASHA, WI 54952
(920) 731-0381

SITE PLAN NOTES:

1. ALL WORK AND MATERIALS SHALL COMPLY WITH ALL CITY OF MENASHA REGULATIONS AND CODES AND O.S.H.A. STANDARDS.
2. REFER TO THE ARCHITECTURAL PLANS FOR EXACT LOCATIONS AND DIMENSIONS OF VESTIBULES, SLOPE PAVING, SIDEWALKS, EXIT PORCHES, TRUCK DOCKS, PRECISE BUILDING DIMENSIONS, EXACT BUILDING UTILITY ENTRANCE LOCATIONS, FIRE SUPPRESSION, FIRE RELATED WALL ASSEMBLIES, AND BUILDING CLASS OF CONSTRUCTION.
3. ALL DISTURBED AREAS ARE TO RECEIVE FOUR INCHES OF TOPSOIL, SEED, MULCH AND WATER UNTIL A HEALTHY STAND OF GRASS IS ESTABLISHED.
4. ALL DIMENSIONS ARE TO THE EDGE OF BUILDING OR FACE OF CURB.
5. CONTRACTOR SHALL BE RESPONSIBLE FOR ALL RELOCATIONS, INCLUDING BUT NOT LIMITED TO, ALL UTILITIES, STORM DRAINAGE, SIGNS, TRAFFIC SIGNALS & POLES, ETC. AS REQUIRED. ALL WORK SHALL BE IN ACCORDANCE WITH GOVERNING AUTHORITIES SPECIFICATIONS AND SHALL BE APPROVED BY SUCH. ALL COST SHALL BE INCLUDED IN BASE BID.
6. NO HAZARDOUS MATERIALS WILL BE STORED ON SITE.
7. FOOD AND/OR BEVERAGES SALES WILL OCCUR ON SITE.
8. ALL STOP SIGNS SHALL BE INSTALLED AND MAINTAINED IN ACCORDANCE WITH THE FEDERAL HIGHWAY ADMINISTRATION M.U.T.C.D, LATEST VERSION.
9. THE CONTRACTOR AND/OR OWNER SHALL NOT PROCEED WITH LAND DISTURBING ACTIVITIES PRIOR TO RECEIVING WRITTEN NOTICE TO PROCEED FROM THE ENGINEER.
10. NO OUTDOOR STORAGE OR DISPLAY IS PROPOSED.
11. ALL MECHANICAL EQUIPMENT WILL BE EITHER ROOF MOUNTED OR PROPERLY SCREENED. SEE LANDSCAPE PLANS FOR SCREENING.
12. REFER TO ARCHITECTURAL PLANS FOR KNOX BOX LOCATION.

JOB SITE LOCATION
SUBWAY – MIDWAY ROAD
MENASHA, WISCONSIN
TAX KEYS: #740077606 (PRIMARY SITE)
#740077605 (ACCESS DRIVE & POND)
#740077604 (POND)

LEGAL DESCRIPTION
ALL OF LOT 2 OF CERTIFIED SURVEY MAP NO. 6441 AND ALL OF LOT 1 OF CERTIFIED SURVEY MAP NO. 4212, LOCATED IN THE SOUTH 1/2 OF THE SOUTHEAST 1/4, SECTION 2, TOWNSHIP 20 NORTH, RANGE 17 EAST, CITY OF MENASHA, WINNEBAGO COUNTY, WISCONSIN

EXTERIOR BUILDING MATERIAL/COLORS
ROOF MATERIAL: RUBBER ROOF MEMBRANE
WALL MATERIAL: 4" BRICK VENEER

ZONING DISTRICT
C-1 COMMERCIAL

FIRE PROTECTION
NO FIRE SPRINKLING SYSTEM

CONSTRUCTION AND OCCUPANCY TYPE
OCCUPANCY TYPE: B
CONSTRUCTION TYPE: 5B

BENCHMARKS:
BM-1 TOP OF HYDRANT
ELEVATION = 779.40
BM-2 TOP OF HYDRANT
ELEVATION = 773.80

PARKING
79 TOTAL SPACES

ACCESSIBLE SPACES
3 HANDICAP SPACE REQUIRED
3 HANDICAP SPACES ADDED

SITE ANALYSIS
TAX KEY: #740077606 (Lot 2, CSM 6441)
TOTAL LOT AREA: 92,263 FT² (2.12 AC)
PROPOSED ROOF TOP AREA: 5,891 FT² (0.14 AC)
PROPOSED PAVEMENT AREA: 48,196 FT² (1.11 AC)
PROPOSED GREENSPACE: 38,176 FT² (0.88 AC)
PERCENT IMPERVIOUS: 58.96%

TAX KEY: #740077605 (Lot 1, CSM 6441)
TOTAL LOT AREA: 87,647 FT² (2.01 AC)
PROPOSED ROOF TOP AREA: 0 FT² (0.0 AC)
PROPOSED PAVEMENT AREA: 7,827 FT² (0.18 AC)
PROPOSED GREENSPACE: 79,820 FT² (1.83 AC)
PERCENT IMPERVIOUS: 8.93%

TAX KEY: #740077604 (Lot 1, CSM 4212)
TOTAL LOT AREA: 169,662 FT² (3.89 AC)
PROPOSED ROOF TOP AREA: 0 FT² (0.0 AC)
PROPOSED PAVEMENT AREA: 4,209 FT² (0.00 AC)
PROPOSED GREENSPACE: 165,453 FT² (0.0 AC)
PERCENT IMPERVIOUS: 2.48%

LEGEND
- EXISTING ASPHALT (TO REMAIN)
- EXISTING ASPHALT (TO REPLACED)
- PROP. ASPHALT (W/ 18" CONC. C&G)
- PROP. CONCRETE
- PROP. ROOF TOP

SHADED DRIVES AND BUILDINGS ADJOINING THE IMMEDIATE SITE ARE FUTURE PROPOSED DEVELOPMENTS. THESE FUTURE DEVELOPMENTS WILL BE APPROVED THROUGH SEPERATE SITE PLAN SUBMITTALS IN THE FUTURE.

TOPOGRAPHIC LEGEND

■	1" x 18" IRON PIPE SET	—OH—	OVERHEAD POWER LINES	◇	GAS VALVE
▲	1-1/4" x 30" REBAR SET	—E—	UNDERGROUND ELECTRIC	○	EXIST STORM MANHOLE
×	CHISELED "X" SET	—T—	UNDERGROUND TELEPHONE		STORM INLET
○	3/4" REBAR FOUND	—FIBER—	UNDERGROUND FIBEROPTIC		YARD DRAIN
□	1" IRON PIPE FOUND	—G—	UNDERGROUND GAS		EXIST SANITARY MANHOLE
△	1-1/4" REBAR FOUND	— CATV —	UNDERGROUND CABLE TV		EXIST. SAN. SEWER
	2" IRON PIPE FOUND	—X—	EXIST. FENCE LINE		EXIST. STO. SEWER
	CHISELED "X" FOUND		SIGN		EXIST. WATER MAIN
	GOVERNMENT CORNER		POWER POLE	800.00	EXIST. SPOT ELEVATION
( )	RECORDED AS		GUY		
	CONIFEROUS TREE		LIGHT POLE	800	CONTOUR W/ ELEVATION
	DECIDUOUS TREE		TELEPHONE PEDESTAL	800.00tc	EXIST. TOP OF CURB ELEV.
	EXIST. WOODS LINE		ELECTRIC PEDESTAL	800.00fl	EXIST. FLOW LINE ELEV.
			CABLE PEDESTAL	FF = 800.00	FIRST FLOOR = 800.00
	WETLANDS		EXIST. HYDRANT		TOPSOIL DEPTH
	SOIL BORING		WATER VALVE		INFILTRATION SOIL BORING
			WATER STOP BOX		

Martenson & Eisele, Inc.
Planning
Environmental
Surveying
Engineering
Architecture
1377 Midway Road
Menasha, WI 54952
www.martenson-eisele.com
info@martenson-eisele.com
920.731.0381 1.800.236.0381

DRAWN BY	CHECKED	APPROVED
asm		

NO.	DATE	REVISION
1	04/30/10	Revisions Per Meeting w/Brian 04/28/10
2	08/24/10	Add north connection road

SITE PLAN
SUBWAY - MIDWAY ROAD
CITY OF MENASHA, WINNEBAGO COUNTY, WISCONSIN

SCALE	DATE
1" = 20'	04/16/10

COMPUTER FILE
Q:\264363a\Design\264363a.dwg

DRAWING NO.
C1.1

SUBWAY - MIDWAY ROAD: UTILITY PLAN

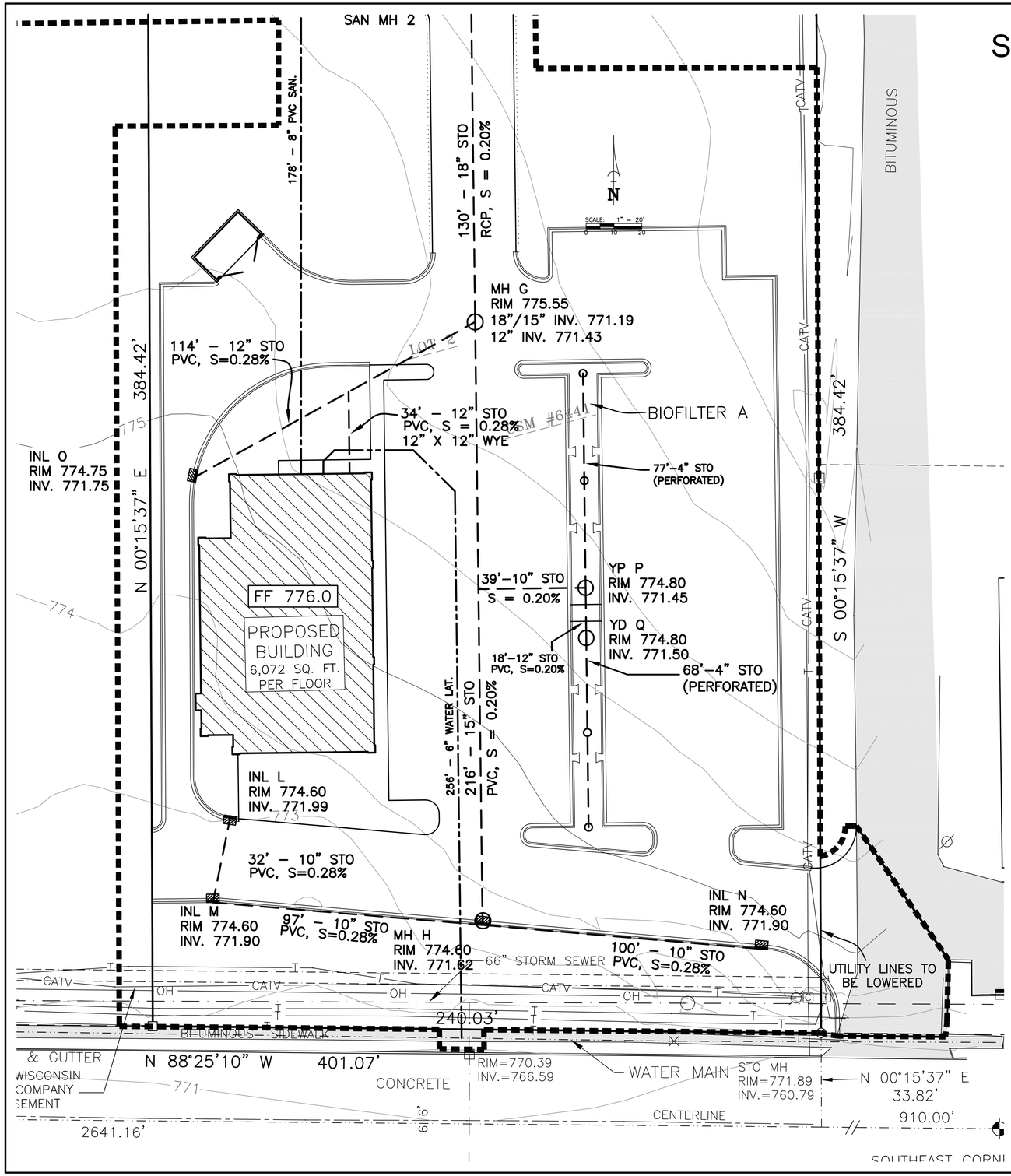

UTILITY PLAN NOTES:

1. THE LOCATION OF EXISTING UTILITY FACILITIES AS SHOWN ON THE PLAN ARE APPROXIMATE. THERE MAY BE OTHER UTILITIES WITHIN THE PROJECT AREA THAT ARE NOT SHOWN. THE CONTRACTOR SHALL HAVE ALL FACILITIES LOCATED PRIOR TO CONSTRUCTION. THE CONTRACTOR SHALL NOTIFY THE ENGINEER IMMEDIATELY IF A CONFLICT WITHIN THE WORK IS DISCOVERED.
2. WATER LATERAL INSTALLATION SHALL BE DONE IN ACCORDANCE WITH THE CURRENT TOWN OF MENASHA WATER MAIN CONSTRUCTION SPECIFICATIONS.
3. ANY PUBLIC SIDEWALK THAT IS DAMAGED DURING CONSTRUCTION SHALL BE REPLACED BY THE CONTRACTOR AT THE CONTRACTOR'S EXPENSE.
4. STORM BUILDING SEWER, STORM DRAIN AND VENT PIPE INSTALLED UNDERGROUND SHALL CONFROM TO ONE OF THE FOLLOWING STANDARDS (PVC): ASTM D1785; ASTM D2665; ASTM D3034; ASTM F891. (RCP): ASTM C14; ASTM C76
5. MATERIALS FOR SANITARY BUILDING SEWER PIPE SHALL CONFROM TO ONE OF THE FOLLOWING STANDARDS (PVC): ASTM D1785; ASTM D2665; ASTM D3034; ASTM F891.
6. MATERIALS FOR WATER SERVE AND PRIVATE WATER MAIN SHALL CONFORM TO ONE OF THE STANDARDS LISTED IN COMM 84.30–8.
7. ALL UNDERGROUND UTILITY PIPING MUST BE INSTALLED WITH TRACER WIRE MEETING THE REQUIREMENTS OF COMM 82.30(11)(h), COMM 82.35(7)(d), AND COMM 82.40(8)(k).
8. SEWER INSTALLATIONS SHALL BE DONE IN ACCORDANCE WITH THE STANDARD SPECIFICATIONS FOR SEWER AND WATER CONSTRUCTION IN WISCONSIN, LATEST EDITION.

UTILITY PLAN LEGEND

- 849 EXISTING CONTOUR
- STORM MAIN
- WATER MAIN
- SANITARY MAIN
- STORM MANHOLE
- DOWNSPOUT CONNECTION
- HYDRANT

UTILITY PLAN SCHEDULE

STRUCTURE ID#	RIM ELEVATION	INVERT ELEVATION	STRUCTURE DEPTH	SIZE & SHAPE	CASTING ID
1	777.50	8" 766.17	11.33'	48" MANHOLE	R–1550
2	778.75	8" 767.05	11.70'	48" MANHOLE	R–1550
A	778.00	24"/15" 768.80	9.20'	48" MANHOLE	R–3161
B	778.00	15" 769.12	8.88'	48" MANHOLE	R–3161
C	773.00	15" 770.00 12" 767.00	SEE DETAIL	48" MANHOLE	SEE DETAIL
D	–	30" 770.00	30" CONC. ENDWALL		
E	778.05	30"/24" 770.54	7.51'	48" MANHOLE	R–2502
F	779.25	24"/18" 770.93	8.32'	48" MANHOLE	R–2502
G	775.55	15" 771.19 18" 771.19 12" 771.43	4.36'	48" MANHOLE	R–2502
H	774.60	15"/10"/10" 771.62	2.98'	24"x36" BOX	R–3290–R
L	774.60	10" 771.99	2.61'	24"x36" BOX	R–3290–R
M	774.60	10" 771.90	2.70'	24"x36" BOX	R–3290–R
N	774.60	10" 771.90	2.70'	24"x36" BOX	R–3290–R
O	774.75	12" 771.75	3.00'	24"x36" BOX	R–3290–R
P	774.80	10"/4" 771.45	3.35'	24" CATCHBASIN	R–2502
Q	774.80	10"/4" 771.50	3.30'	24" CATCHBASIN	R–2502
R	774.39	12" 770.89	3.50'	24"x36" BOX	R–3290–R
S	773.96	12" 770.46	3.50'	24"x36" BOX	R–3290–R
T	774.24	12"/12"/24" TBD	TBD	48" MANHOLE	R–1550
U		18" 770.00	18" CONC. ENDWALL		
V	776.75	18" 770.65	6.10'	48" MANHOLE	R–2502
W	777.75	15" 771.06	6.69'	48" MANHOLE	R–2502
X	776.00	18" 770.20	5.80'	48" MANHOLE	R–3161
Y	776.00	18" 770.40	5.60'	48" MANHOLE	R–3161

TOPOGRAPHIC LEGEND

- 1" x 18" IRON PIPE SET
- 1–1/4" x 30" REBAR SET
- CHISELED "X" SET
- 3/4" REBAR FOUND
- 1" IRON PIPE FOUND
- 1–1/4" REBAR FOUND
- 2" IRON PIPE FOUND
- CHISELED "X" FOUND
- GOVERNMENT CORNER
- RECORDED AS
- CONIFEROUS TREE
- DECIDUOUS TREE
- EXIST. WOODS LINE
- WETLANDS
- SOIL BORING
- OVERHEAD POWER LINES
- UNDERGROUND ELECTRIC
- UNDERGROUND TELEPHONE
- UNDERGROUND FIBEROPTIC
- UNDERGROUND GAS
- UNDERGROUND CABLE TV
- EXIST. FENCE LINE
- SIGN
- POWER POLE
- GUY
- LIGHT POLE
- TELEPHONE PEDESTAL
- ELECTRIC PEDESTAL
- CABLE PEDESTAL
- EXIST. HYDRANT
- WATER VALVE
- WATER STOP BOX
- GAS VALVE
- EXIST. STORM MANHOLE
- STORM INLET
- YARD DRAIN
- EXIST SANITARY MANHOLE
- EXIST. SAN. SEWER
- EXIST. STO. SEWER
- EXIST. WATER MAIN
- 800.00 EXIST. SPOT ELEVATION
- 800 CONTOUR W/ ELEVATION
- 800.00tc EXIST. TOP OF CURB ELEV.
- 800.00fl EXIST. FLOW LINE ELEV.
- FF = 800.00 FIRST FLOOR = 800.00
- TOPSOIL DEPTH
- INFILTRATION SOIL BORING

Martenson & Eisele, Inc.
Planning
Environmental
Surveying
Engineering
Architecture
1377 Midway Road
Menasha, WI 54952
www.martenson-eisele.com
info@martenson-eisele.com
920.731.0381 1.800.236.0381

NO.	DATE	REVISION
1	04/30/10	Revisions Per Meeting w/Brian
2	08/24/10	Add north access road

DRAWN BY: gsm
CHECKED
APPROVED

UTILITY PLAN
SUBWAY - MIDWAY ROAD
CITY OF MENASHA, WINNEBAGO COUNTY, WISCONSIN

SCALE: 1" = 20'
DATE: 04/16/10
COMPUTER FILE: Q:\264363a\Design\264363a.dwg

DRAWING NO. C2.0

SUBWAY - MIDWAY ROAD: UTILITY PLAN

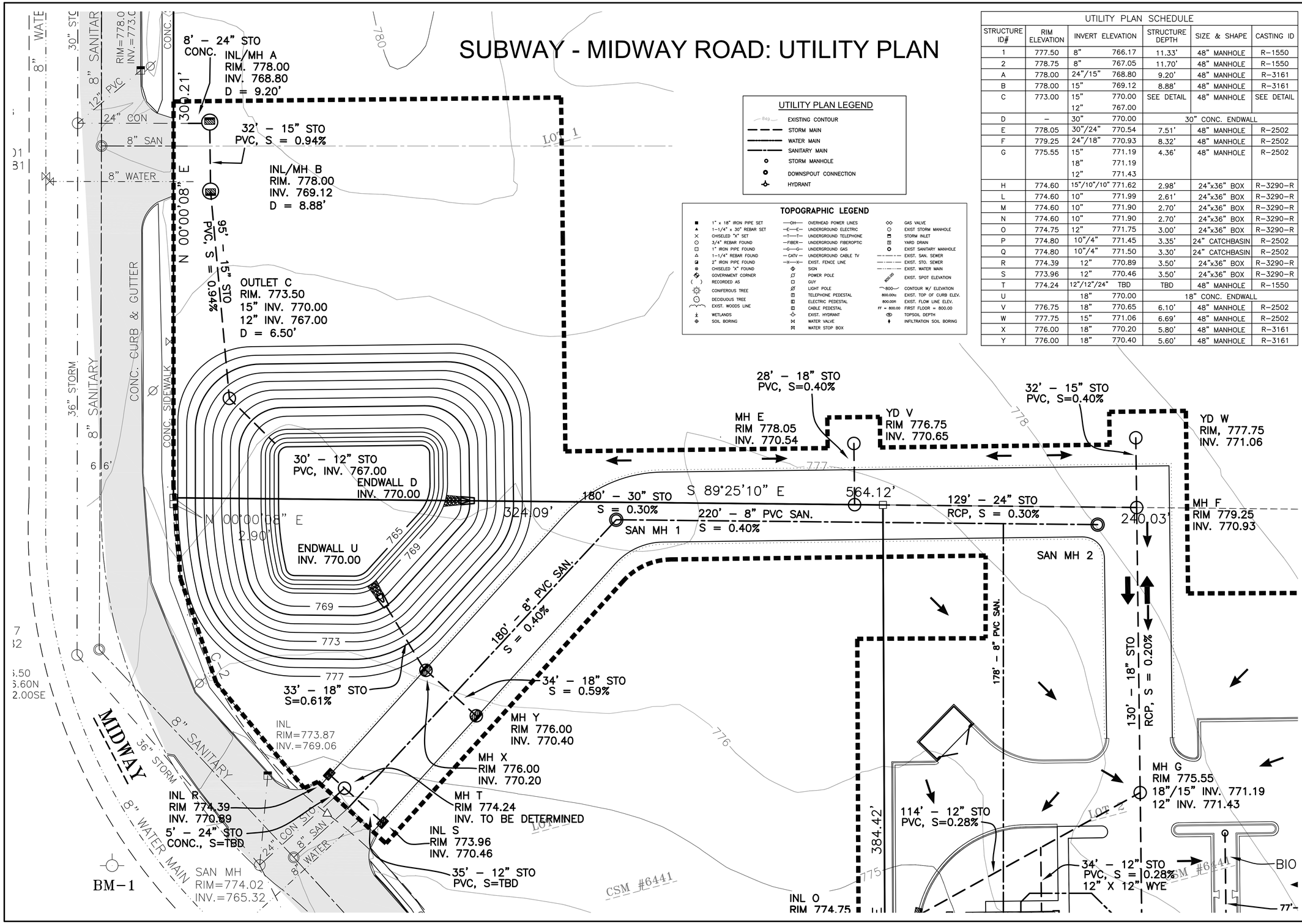

UTILITY PLAN LEGEND

- EXISTING CONTOUR
- STORM MAIN
- WATER MAIN
- SANITARY MAIN
- STORM MANHOLE
- DOWNSPOUT CONNECTION
- HYDRANT

TOPOGRAPHIC LEGEND

■	1" x 18" IRON PIPE SET	—OH—	OVERHEAD POWER LINES	◇	GAS VALVE
▲	1–1/4" x 30" REBAR SET	—E—E—	UNDERGROUND ELECTRIC	○	EXIST STORM MANHOLE
×	CHISELED "X" SET	—T—T—	UNDERGROUND TELEPHONE		STORM INLET
○	3/4" REBAR FOUND	—FIBER—	UNDERGROUND FIBEROPTIC		YARD DRAIN
□	1" IRON PIPE FOUND	—G—G—	UNDERGROUND GAS		EXIST SANITARY MANHOLE
△	1–1/4" REBAR FOUND	— CATV —	UNDERGROUND CABLE TV		EXIST. SAN. SEWER
	2" IRON PIPE FOUND	—X—X—	EXIST. FENCE LINE		EXIST. STO. SEWER
	CHISELED "X" FOUND		SIGN		EXIST. WATER MAIN
	GOVERNMENT CORNER		POWER POLE	800.00	EXIST. SPOT ELEVATION
( )	RECORDED AS		GUY	800	CONTOUR W/ ELEVATION
	CONIFEROUS TREE		LIGHT POLE	800.00%	EXIST. TOP OF CURB ELEV.
	DECIDUOUS TREE		TELEPHONE PEDESTAL	800.00ff	EXIST. FLOW LINE ELEV.
	EXIST. WOODS LINE		ELECTRIC PEDESTAL	FF = 800.00	FIRST FLOOR = 800.00
	WETLANDS		CABLE PEDESTAL		TOPSOIL DEPTH
	SOIL BORING		EXIST. HYDRANT		INFILTRATION SOIL BORING
			WATER VALVE		
			WATER STOP BOX		

UTILITY PLAN SCHEDULE

STRUCTURE ID#	RIM ELEVATION	INVERT ELEVATION		STRUCTURE DEPTH	SIZE & SHAPE	CASTING ID
1	777.50	8"	766.17	11.33'	48" MANHOLE	R–1550
2	778.75	8"	767.05	11.70'	48" MANHOLE	R–1550
A	778.00	24"/15"	768.80	9.20'	48" MANHOLE	R–3161
B	778.00	15"	769.12	8.88'	48" MANHOLE	R–3161
C	773.00	15"	770.00	SEE DETAIL	48" MANHOLE	SEE DETAIL
		12"	767.00			
D	–	30"	770.00	30" CONC. ENDWALL		
E	778.05	30"/24"	770.54	7.51'	48" MANHOLE	R–2502
F	779.25	24"/18"	770.93	8.32'	48" MANHOLE	R–2502
G	775.55	15"	771.19	4.36'	48" MANHOLE	R–2502
		18"	771.19			
		12"	771.43			
H	774.60	15"/10"/10"	771.62	2.98'	24"x36" BOX	R–3290–R
L	774.60	10"	771.99	2.61'	24"x36" BOX	R–3290–R
M	774.60	10"	771.90	2.70'	24"x36" BOX	R–3290–R
N	774.60	10"	771.90	2.70'	24"x36" BOX	R–3290–R
O	774.75	12"	771.75	3.00'	24"x36" BOX	R–3290–R
P	774.80	10"/4"	771.45	3.35'	24" CATCHBASIN	R–2502
Q	774.80	10"/4"	771.50	3.30'	24" CATCHBASIN	R–2502
R	774.39	12"	770.89	3.50'	24"x36" BOX	R–3290–R
S	773.96	12"	770.46	3.50'	24"x36" BOX	R–3290–R
T	774.24	12"/12"/24"	TBD	TBD	48" MANHOLE	R–1550
U		18"	770.00	18" CONC. ENDWALL		
V	776.75	18"	770.65	6.10'	48" MANHOLE	R–2502
W	777.75	15"	771.06	6.69'	48" MANHOLE	R–2502
X	776.00	18"	770.20	5.80'	48" MANHOLE	R–3161
Y	776.00	18"	770.40	5.60'	48" MANHOLE	R–3161

Martenson & Eisele, Inc.
Planning
Environmental
Surveying
Engineering
Architecture
1377 Midway Road
Menasha, WI 54952
www.martenson-eisele.com
info@martenson-eisele.com
920.731.0381 1.800.236.0381

NO.	DATE	REVISION
1	08/24/10	Add north access road

DRAWN BY: asm
CHECKED
APPROVED

UTILITY PLAN
SUBWAY - MIDWAY ROAD

CITY OF MENASHA, WINNEBAGO COUNTY, WISCONSIN

SCALE: 1" = 20'
DATE: 08/19/20
COMPUTER FILE: Q:\264363a\Design\264363a.dwg

DRAWING NO. C2.1

SUBWAY - MIDWAY ROAD: DRAINAGE PLAN

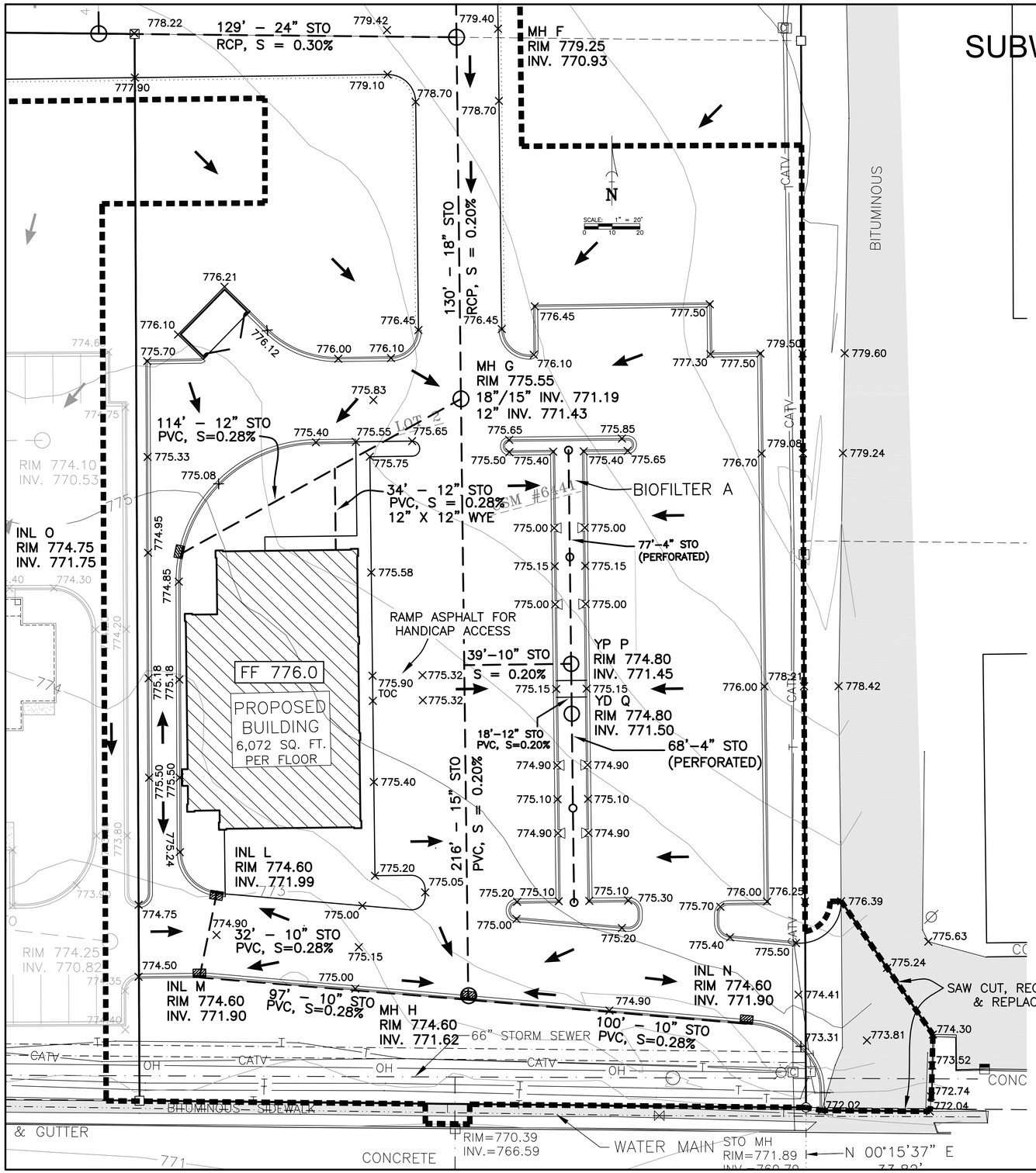

BENCHMARKS:

BM–1 TOP OF HYDRANT
ELEVATION = 779.40
BM–2 TOP OF HYDRANT
ELEVATION = 773.80

DRAINAGE PLAN LEGEND

(D)	PROPOSED 30" CONCRETE CATCH BASIN
(B)	PROPOSED 24" x 36" INLET BOX
X 796.08	PROPOSED FLOWLINE ELEVATION
X <796.08>	EXISTING RIGHT–OF–WAY ELEVATION
796.08	EXISTING ELEVATION
796.1	POSSIBLE GROUND @ FOUNDATION ELEV.
(824.00)	PERTINENT DITCH OR SWALE ELEV.
	DIRECTION OF DRAINAGE
792	EXISTING CONTOUR
	STORM SEWER
	LIMITS OF CONSTRUCTION

DRAINAGE PLAN NOTES:

1. THE CONTRACTOR SHALL REMOVE TOPSOIL FROM THE SITE. ONLY TOPSOIL NEEDED FOR RESTORATION SHALL BE STOCKPILED ON SITE.
2. THE LOCATION OF EXISTING UTILITY FACILITIES AS SHOWN ON THE PLAN ARE APPROXIMATE. THERE MAY BE OTHER UTILITIES WITHIN THE PROJECT AREA THAT ARE NOT SHOWN. THE CONTRACTOR SHALL HAVE ALL FACILITIES LOCATED PRIOR TO CONSTRUCTION. THE CONTRACTOR SHALL NOTIFY THE ENGINEER IMMEDIATELY IF A CONFLICT WITHIN THE WORK IS DISCOVERED.
3. ALL GRADES SHOWN ARE CURB FLOW LINE OR EDGE OF PAVEMENT UNLESS OTHERWISE NOTED.

TOPOGRAPHIC LEGEND

■	1" x 18" IRON PIPE SET	—OH—	OVERHEAD POWER LINES	◇	GAS VALVE
▲	1–1/4" x 30" REBAR SET	—E—E—	UNDERGROUND ELECTRIC	○	EXIST STORM MANHOLE
×	CHISELED "X" SET	—T—T—	UNDERGROUND TELEPHONE		STORM INLET
○	3/4" REBAR FOUND	—FIBER—	UNDERGROUND FIBEROPTIC		YARD DRAIN
□	1" IRON PIPE FOUND	—G—G—	UNDERGROUND GAS		EXIST SANITARY MANHOLE
△	1–1/4" REBAR FOUND	— CATV —	UNDERGROUND CABLE TV	— — — —	EXIST. SAN. SEWER
	2" IRON PIPE FOUND	—X—X—	EXIST. FENCE LINE	— · — · —	EXIST. STO. SEWER
⊕	CHISELED "X" FOUND		SIGN	— · — · —	EXIST. WATER MAIN
	GOVERNMENT CORNER		POWER POLE	800.00	EXIST. SPOT ELEVATION
( )	RECORDED AS		GUY	800	CONTOUR W/ ELEVATION
	CONIFEROUS TREE		LIGHT POLE	800.00te	EXIST. TOP OF CURB ELEV.
	DECIDUOUS TREE		TELEPHONE PEDESTAL	800.00fl	EXIST. FLOW LINE ELEV.
	EXIST. WOODS LINE		ELECTRIC PEDESTAL	FF = 800.00	FIRST FLOOR = 800.00
	WETLANDS		CABLE PEDESTAL		TOPSOIL DEPTH
	SOIL BORING		EXIST. HYDRANT		INFILTRATION SOIL BORING
			WATER VALVE		
			WATER STOP BOX		

Martenson & Eisele, Inc.
Planning
Environmental
Surveying
Engineering
Architecture
1377 Midway Road
Menasha, WI 54952
www.martenson-eisele.com
info@martenson-eisele.com
920.731.0381 1.800.236.0381

DRAWN BY	CHECKED	APPROVED
asm		

NO.	DATE	REVISION
1	04/30/10	Revisions Per Meeting w/Brian 04/28/10
2	08/24/10	Add north access road

DRAINAGE PLAN
SUBWAY - MIDWAY ROAD
CITY OF MENASHA, WINNEBAGO COUNTY, WISCONSIN

SCALE	DATE
1" = 20'	04/16/10

COMPUTER FILE
Q:\264363a\Design\264363a.dwg

DRAWING NO.
C3.0

SUBWAY - MIDWAY ROAD: DRAINAGE PLAN

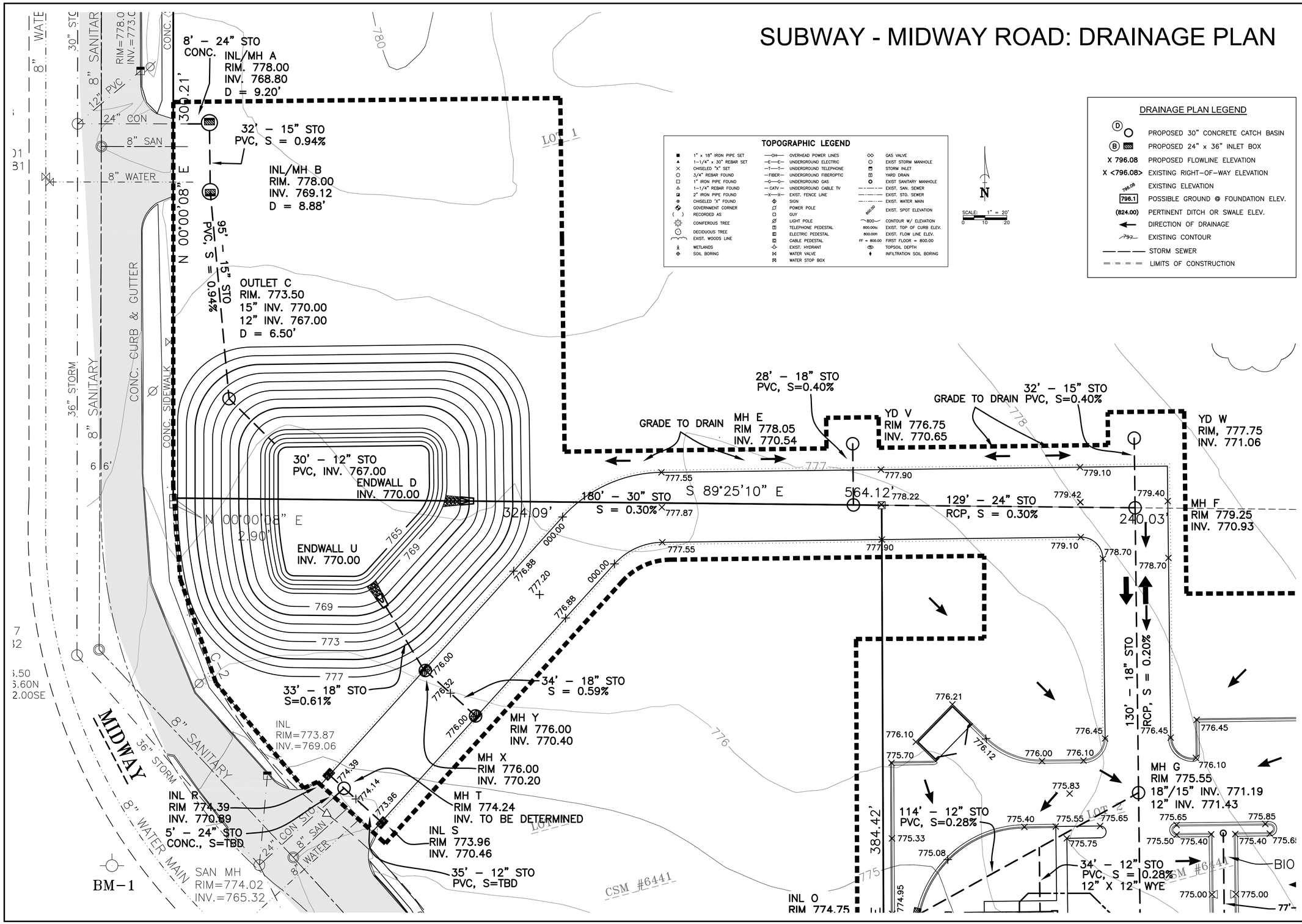

TOPOGRAPHIC LEGEND

■	1" x 18" IRON PIPE SET	—OH—	OVERHEAD POWER LINES	◇◇	GAS VALVE
▲	1-1/4" x 30" REBAR SET	—E—E—	UNDERGROUND ELECTRIC	○	EXIST STORM MANHOLE
×	CHISELED "X" SET	—T—T—	UNDERGROUND TELEPHONE		STORM INLET
○	3/4" REBAR FOUND	—FIBER—	UNDERGROUND FIBEROPTIC		YARD DRAIN
□	1" IRON PIPE FOUND	—G—G—	UNDERGROUND GAS		EXIST SANITARY MANHOLE
△	1-1/4" REBAR FOUND	— CATV —	UNDERGROUND CABLE TV		EXIST. SAN. SEWER
	2" IRON PIPE FOUND	—X—X—	EXIST. FENCE LINE		EXIST. STO. SEWER
	CHISELED "X" FOUND		SIGN		EXIST. WATER MAIN
	GOVERNMENT CORNER		POWER POLE	800.00	EXIST. SPOT ELEVATION
( )	RECORDED AS		GUY		
	CONIFEROUS TREE		LIGHT POLE	800	CONTOUR W/ ELEVATION
	DECIDUOUS TREE		TELEPHONE PEDESTAL	800.00tc	EXIST. TOP OF CURB ELEV.
	EXIST. WOODS LINE		ELECTRIC PEDESTAL	800.00fl	EXIST. FLOW LINE ELEV.
	WETLANDS		CABLE PEDESTAL	FF = 800.00	FIRST FLOOR = 800.00
	SOIL BORING		EXIST. HYDRANT		TOPSOIL DEPTH
			WATER VALVE		INFILTRATION SOIL BORING
			WATER STOP BOX		

DRAINAGE PLAN LEGEND

(D)	PROPOSED 30" CONCRETE CATCH BASIN
(B)	PROPOSED 24" x 36" INLET BOX
X 796.08	PROPOSED FLOWLINE ELEVATION
X <796.08>	EXISTING RIGHT-OF-WAY ELEVATION
796.08	EXISTING ELEVATION
796.1	POSSIBLE GROUND @ FOUNDATION ELEV.
(824.00)	PERTINENT DITCH OR SWALE ELEV.
	DIRECTION OF DRAINAGE
797	EXISTING CONTOUR
	STORM SEWER
	LIMITS OF CONSTRUCTION

Martenson & Eisele, Inc.
Planning
Environmental
Surveying
Engineering
Architecture
1377 Midway Road
Menasha, WI 54952
www.martenson-eisele.com
info@martenson-eisele.com
920.731.0381 1.800.236.0381

NO.	DATE	REVISION	DRAWN BY	CHECKED	APPROVED
1	08/24/10	Add North Access Road	gsm		

DRAINAGE PLAN
SUBWAY - MIDWAY ROAD

CITY OF MENASHA, WINNEBAGO COUNTY, WISCONSIN

SCALE	DATE
1" = 20'	08/19/10

COMPUTER FILE
Q:\264363a\Design\264363a.dwg

DRAWING NO.
C3.1

SUBWAY - MIDWAY ROAD: EROSION CONTROL PLAN

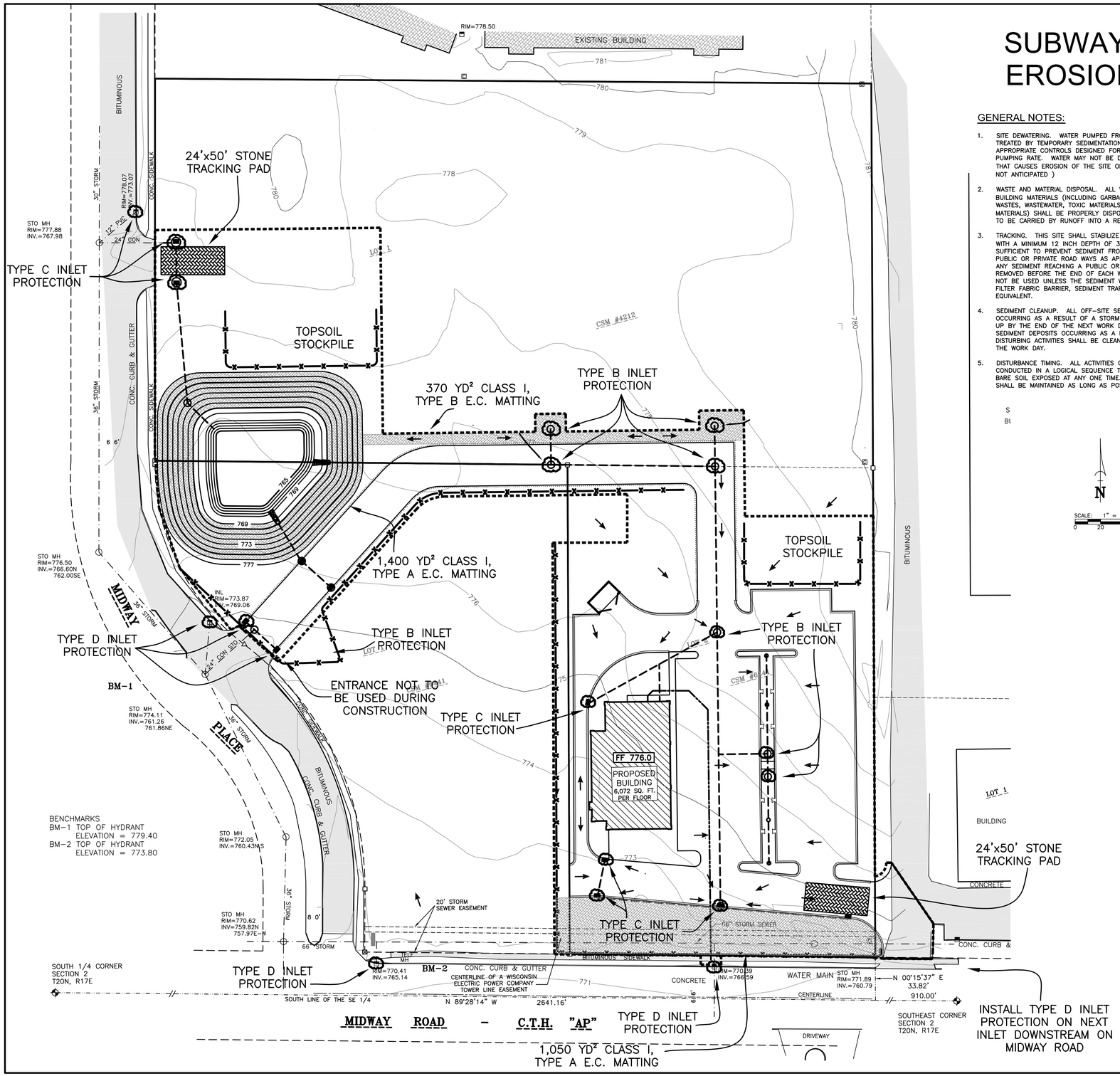

GENERAL NOTES:

1. SITE DEWATERING. WATER PUMPED FROM THE SITE SHALL BE TREATED BY TEMPORARY SEDIMENTATION BASINS OR OTHER APPROPRIATE CONTROLS DESIGNED FOR THE HIGHEST DEWATERING PUMPING RATE. WATER MAY NOT BE DISCHARGED IN A MANNER THAT CAUSES EROSION OF THE SITE OR RECEIVING CHANNELS. (NOT ANTICIPATED)

2. WASTE AND MATERIAL DISPOSAL. ALL WASTE AND UNUSED BUILDING MATERIALS (INCLUDING GARBAGE, DEBRIS, CLEANING WASTES, WASTEWATER, TOXIC MATERIALS OR HAZARDOUS MATERIALS) SHALL BE PROPERLY DISPOSED OF AND NOT ALLOWED TO BE CARRIED BY RUNOFF INTO A RECEIVING CHANNEL.

3. TRACKING. THIS SITE SHALL STABILIZE THE PROPOSED DRIVE WITH A MINIMUM 12 INCH DEPTH OF 3" TO 6" CLEAR AGGREGATE SUFFICIENT TO PREVENT SEDIMENT FROM BEING TRACKED ONTO PUBLIC OR PRIVATE ROAD WAYS AS APPROVED BY THE DIRECTOR. ANY SEDIMENT REACHING A PUBLIC OR PRIVATE ROAD SHALL BE REMOVED BEFORE THE END OF EACH WORK DAY. FLUSHING MAY NOT BE USED UNLESS THE SEDIMENT WILL BE CONTROLLED BY A FILTER FABRIC BARRIER, SEDIMENT TRAP, SEDIMENT BASIN OR EQUIVALENT.

4. SEDIMENT CLEANUP. ALL OFF-SITE SEDIMENT DEPOSITS OCCURRING AS A RESULT OF A STORM EVENT SHALL BE CLEANED UP BY THE END OF THE NEXT WORK DAY. ALL OTHER OFF-SITE SEDIMENT DEPOSITS OCCURRING AS A RESULT OF LAND DISTURBING ACTIVITIES SHALL BE CLEANED UP BY THE END OF THE WORK DAY.

5. DISTURBANCE TIMING. ALL ACTIVITIES ON THE SITE SHALL BE CONDUCTED IN A LOGICAL SEQUENCE TO MINIMIZE THE AREA OF BARE SOIL EXPOSED AT ANY ONE TIME. EXISTING VEGETATION SHALL BE MAINTAINED AS LONG AS POSSIBLE.

S
Bl

LEGEND

- SILT FENCE
- EROSION CONTROL TRACKING PAD
- INLET PROTECTION
- EROSION CONTROL MAT
- LIMITS OF CONSTRUCTION

PLAN NOTES:

1. THE CONTRACTOR SHALL NOTIFY THE CITY OF MENASHA EROSION CONTROL INSPECTOR AT LEAST 2 DAYS PRIOR TO THE START OF SOIL DISTURBING ACTIVITIES.

2. BUILDING/PAVING PERMITS WILL BE WITHHELD UNTIL ALL INITIAL EROSION CONTROL PRACTICES ARE IMPLEMENTED AND APPROVED BY THE CITY OF MENASAHA EROSION CONTROL INSPECTOR.

3. EROSION CONTROL MEASURES SHALL BE MAINTAINED THROUGHOUT THE DURATION OF CONSTRUCTION UNTIL THE SITE IS STABILIZED BY VEGETATION OR OTHER APPROVED MEANS.

4. ALL ACTIVITIES SHALL BE CONDUCTED IN A LOGICAL SEQUENCE AS TO MINIMIZE THE AMOUNT OF BARE SOIL EXPOSED AT ANY ONE TIME. MAINTAIN EXISTING VEGETATION AS LONG AS POSSIBLE.

5. CRUSHED ROCK DRIVES UTILIZING 3 – 6 INCH CLEAR AGGREGATE SHALL BE MAINTAINED AT ALL CONSTRUCTION ENTRANCES TO THE SITE. THE ROCK DRIVE SHALL BE A MINIMUM OF 12 INCHES THICK AND BE A MINIMUM OF 50 FEET IN LENGTH BY THE WIDTH OF THE DRIVEWAY.

6. OFF-SITE SEDIMENT DEPOSITS OCCURRING AS A RESULT OF A STORM EVENT SHALL BE CLEANED UP BY THE END OF THE NEXT WORK DAY. ALL OFF-SITE SEDIMENT DEPOSITS OCCURRING AS A RESULT OF CONSTRUCTION ACTIVITIES, INCLUDING SOIL TRACKED BY CONSTRUCTION TRAFFIC, SHALL AT A MINIMUM BE CLEANED BY THE END OF EACH WORK DAY. EXCESSIVE AMOUNTS OF SEDIMENT OR OTHER DEBRIS TRACKED ONTO ADJACENT STREETS SHALL BE CLEANED IMMEDIATELY. FINE SEDIMENT ACCUMULATIONS SHALL BE CLEANED FROM ADJACENT STREETS BY THE USE OF MECHANICAL OR MANUAL SWEEPING OPERATIONS ONCE A WEEK AT A MINIMUM AND BEFORE IMMINENT RAIN EVENTS.

7. ALL SEDIMENT LADEN WATER PUMPED FROM THE SITE SHALL BE TREATED BY A TEMPORARY SEDIMENT BASIN OR BE FILTERED BY OTHER APPROVED MEANS. WATER SHALL NOT BE DISCHARGED IN A MANNER THAT CAUSES EROSION OF THE SITE OR RECEIVING CHANNELS.

8. DISTURBED GROUND OUTSIDE OF THE EVERYDAY CONSTRUCTION AREA, INCLUDING SOIL STOCKPILES LEFT INACTIVE FOR MORE THAN 7 DAYS, SHALL AT A MINIMUM BE TEMPORARILY STABILIZED BY SEEDING/MULCHING OR OTHER METHODS APPROVED BY THE CITY OF MENASHA EROSION CONTROL INSPECTOR.

9. WASTE MATERIAL GENERATED ON THE CONSTRUCTION SITE (INCLUDING CONCRETE TRUCK WASHOUT AND ANY OTHER CHEMICALS) SHALL BE PROPERLY DISPOSED OF AND NOT ALLOWED TO RUN INTO A RECEIVING WATER OR STORM SEWER SYSTEM.

10. IN THE CASE OF LATE SEASON AND WINTER CONSTRUCTION, RESTORATION/LANDSCAPING OF THE SITE SHALL OCCUR NO LATER THAN JUNE 1ST OF THE NEXT CONSTRUCTION SEASON. EROSION CONTROL MEASURES SHALL REMAIN INTACT UNTIL FINAL RESTORATION OF THE SITE IS COMPLETE. FABRIC INSIDE THE INLET AND CATCH BASIN GRATING SHALL BE REMOVED AS SOON AS FREEZING WEATHER OCCURS SO DRAINAGE IS NOT IMPAIRED THROUGHOUT THE WINTER MONTHS. ALL EROSION CONTROL PRACTICES REMOVED OR DAMAGED DUE TO WINTER WEATHER SHALL BE REPLACED IN THE SPRING IMMEDIATELY AFTER THE THAW.

11. EROSION CONTROL DEVICES DESTROYED AS A RESULT OF CONSTRUCTION ACTIVITIES SHALL BE REPAIRED BY THE END OF THE WORK DAY.

12. THE CONTRACTOR SHALL INSPECT ALL EROSION CONTROL MEASURES AT LEAST ONCE A WEEK AND AFTER ANY RAINFALL OF 0.5 INCHES OR MORE AND MAKE NEEDED REPAIRS. RESPONSIBILITY FOR EROSION CONTROL INSPECTION BELONGS TO THE CONTRACTOR. THE ENGINEER HAS NOT BEEN CONTRACTED TO PROVIDE EROSION CONTROL INSPECTION.

13. TEMPORARY EROSION CONTROL MEASURES SHALL BE REMOVED AT THE CONCLUSION OF CONSTRUCTION AFTER STABILIZATION OF DISTURBED SOIL HAS OCCURRED.

14. INSTALL TYPE D INLET PROTECTION (AS SHOWN BELOW IN DETAIL) ON STORM SEWER INLET LOCATED WITHIN CITY RIGHT OF WAY. TYPE TYPE B INLET PROTECTION SHALL BE USED ON THE YARD DRAIN ON THE PROJECT SITE.

15. ADJACENT STREET INLETS SHALL BE PROTECTED WITH TYPE D INLET PROTECTION AS DETAILED ON SHEET C401. INLET PROTECTION SHALL BE REMOVED WHEN DISTURBED AREAS FLOWING TO THE INLET ARE RESTORED OR HAVE OTHER PROTECTIVE MEASURES IN PLACE.

16. ALL DISTURBED AREAS SHALL BE RESTORED WITH TEMPORARY SEED (OATS/RYE) AND MULCHED WITHIN 10 DAYS OF FINAL GRADING.

17. THE CONTRACTOR AND/OR OWNER SHALL NOT PROCEED WITH LAND DISTURBING ACTIVITIES PRIOR TO RECEIVING WRITTEN NOTICE TO PROCEED FROM THE ENGINEER.

TOPOGRAPHIC LEGEND

■	1" x 18" IRON PIPE SET	—OH—	OVERHEAD POWER LINES	◇	GAS VALVE
▲	1-1/4" x 30" REBAR SET	—E—	UNDERGROUND ELECTRIC	○	EXIST STORM MANHOLE
×	CHISELED "X" SET	—T—	UNDERGROUND TELEPHONE		STORM INLET
○	3/4" REBAR FOUND	—FIBER—	UNDERGROUND FIBEROPTIC		YARD DRAIN
□	1" IRON PIPE FOUND	—G—	UNDERGROUND GAS		EXIST SANITARY MANHOLE
△	1-1/4" REBAR FOUND	— CATV —	UNDERGROUND CABLE TV		EXIST. SAN. SEWER
	2" IRON PIPE FOUND	—X—	EXIST. FENCE LINE		EXIST. STO. SEWER
	CHISELED "X" FOUND		SIGN		EXIST. WATER MAIN
	GOVERNMENT CORNER		POWER POLE	800.00	EXIST. SPOT ELEVATION
( )	RECORDED AS		GUY		
	CONIFEROUS TREE		LIGHT POLE	800	CONTOUR W/ ELEVATION
	DECIDUOUS TREE		TELEPHONE PEDESTAL	800.00tc	EXIST. TOP OF CURB ELEV.
	EXIST. WOODS LINE		ELECTRIC PEDESTAL	800.00fl	EXIST. FLOW LINE ELEV.
			CABLE PEDESTAL	FF = 800.00	FIRST FLOOR = 800.00
	WETLANDS		EXIST. HYDRANT		TOPSOIL DEPTH
	SOIL BORING		WATER VALVE		INFILTRATION SOIL BORING
			WATER STOP BOX		

Martenson & Eisele, Inc.
Planning
Environmental
Surveying
Engineering
Architecture
1377 Midway Road
Menasha, WI 54952
www.martenson-eisele.com
info@martenson-eisele.com
920.731.0381 1.800.236.0381

NO.	DATE	REVISION
1	04/30/10	Revisions Per Meeting w/Brian 04/28/10
2	08/24/10	Add north access drive

DRAWN BY: asm | CHECKED | APPROVED

EROSION CONTROL PLAN
SUBWAY - MIDWAY ROAD

CITY OF MENASHA, WINNEBAGO COUNTY, WISCONSIN

SCALE	DATE
1" = 40'	04/16/10

COMPUTER FILE
Q:\264363a\Design\264363a.dwg

DRAWING NO.
C4.0

POND CROSS SECTION

A-A , (N.T.S.)

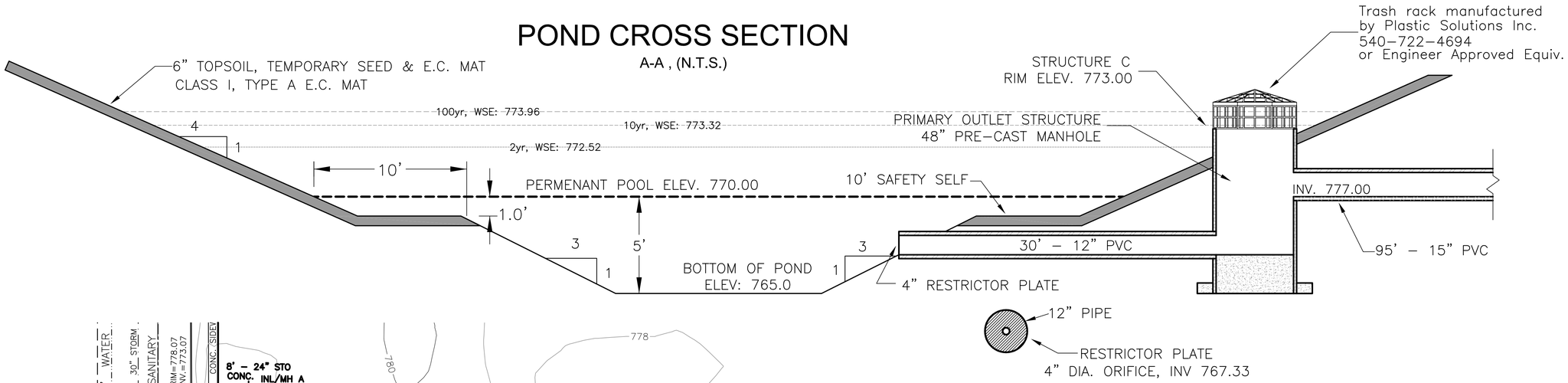

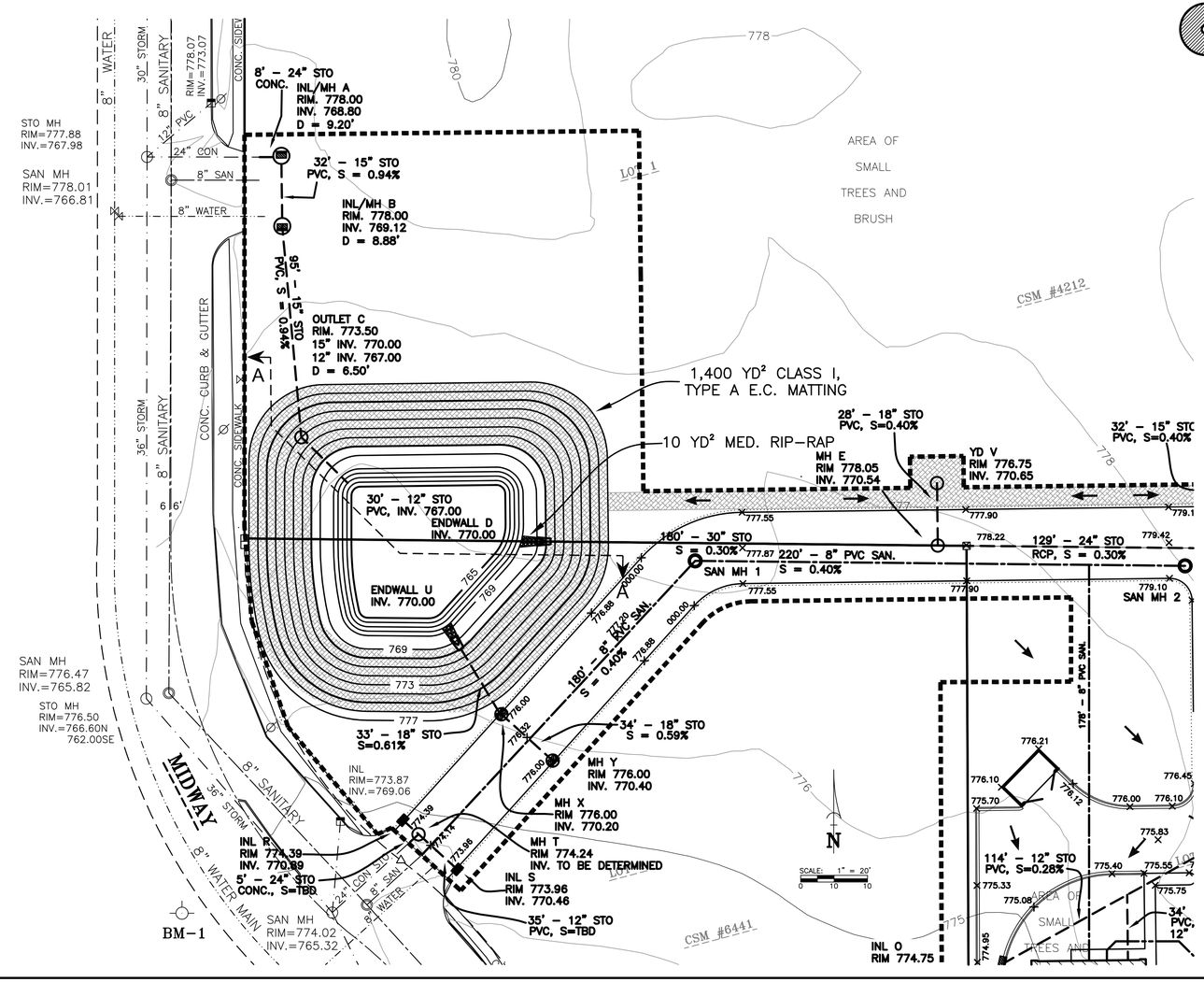

NORMAL WATER ELEVATION = 770.00
ALL SIDE SLOPES ABOVE NWSE = 4:1
ALL SIDE SLOPES BELOW SAFETY SHELF = 3:1
SAFETY SHELF = 1.0' DEEP, 10' FROM NORMAL WSE
WET BASIN: 5' BELOW WATER SURFACE
SEDIMENT BAY BOTTOM = 765.00
TOP OF POND ELEVATION = 777.00
MAX. POND STORAGE ELEVATION = 774.60

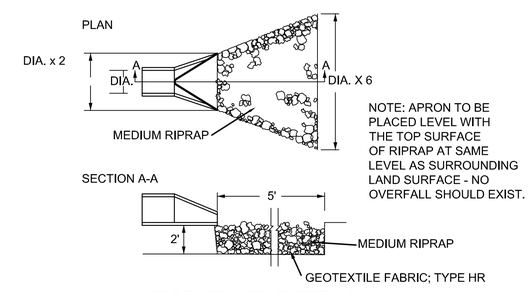

NOTE: APRON TO BE PLACED LEVEL WITH THE TOP SURFACE OF RIPRAP AT SAME LEVEL AS SURROUNDING LAND SURFACE - NO OVERFALL SHOULD EXIST.

RIP-RAP DETAIL

(N.T.S.)

TOPOGRAPHIC LEGEND

■	1" x 18" IRON PIPE SET	—OH—	OVERHEAD POWER LINES	◇	GAS VALVE
▲	1-1/4" x 30" REBAR SET	—E—	UNDERGROUND ELECTRIC	○	EXIST STORM MANHOLE
×	CHISELED "X" SET	—T—	UNDERGROUND TELEPHONE		STORM INLET
○	3/4" REBAR FOUND	—FIBER—	UNDERGROUND FIBEROPTIC		YARD DRAIN
□	1" IRON PIPE FOUND	—G—	UNDERGROUND GAS		EXIST SANITARY MANHOLE
△	1-1/4" REBAR FOUND	— CATV —	UNDERGROUND CABLE TV		EXIST. SAN. SEWER
	2" IRON PIPE FOUND	—X—	EXIST. FENCE LINE		EXIST. STO. SEWER
	CHISELED "X" FOUND		SIGN		EXIST. WATER MAIN
	GOVERNMENT CORNER		POWER POLE	800.00	EXIST. SPOT ELEVATION
( )	RECORDED AS		GUY		
	CONIFEROUS TREE		LIGHT POLE	800	CONTOUR W/ ELEVATION
	DECIDUOUS TREE		TELEPHONE PEDESTAL	800.00tc	EXIST. TOP OF CURB ELEV.
	EXIST. WOODS LINE		ELECTRIC PEDESTAL	800.00fl	EXIST. FLOW LINE ELEV.
			CABLE PEDESTAL	FF = 800.00	FIRST FLOOR = 800.00
	WETLANDS		EXIST. HYDRANT		TOPSOIL DEPTH
	SOIL BORING		WATER VALVE		INFILTRATION SOIL BORING
			WATER STOP BOX		

Martenson & Eisele, Inc.
Planning
Environmental
Surveying
Engineering
Architecture
1377 Midway Road
Menasha, WI 54952
www.martenson-eisele.com
info@martenson-eisele.com
920.731.0381 1.800.236.0381

DRAWN BY	CHECKED	APPROVED
asm		

NO.	DATE	REVISION
1	04/30/10	Revisions Per Meeting w/Brian 04/28/10
2	08/24/10	Add north access drive

POND DETAIL
SUBWAY - MIDWAY ROAD

CITY OF MENASHA, WINNEBAGO COUNTY, WISCONSIN

SCALE	DATE
1" = 20'	04/16/10

COMPUTER FILE

Q:\264363a\Design\264363a.dwg

DRAWING NO.

C5.0

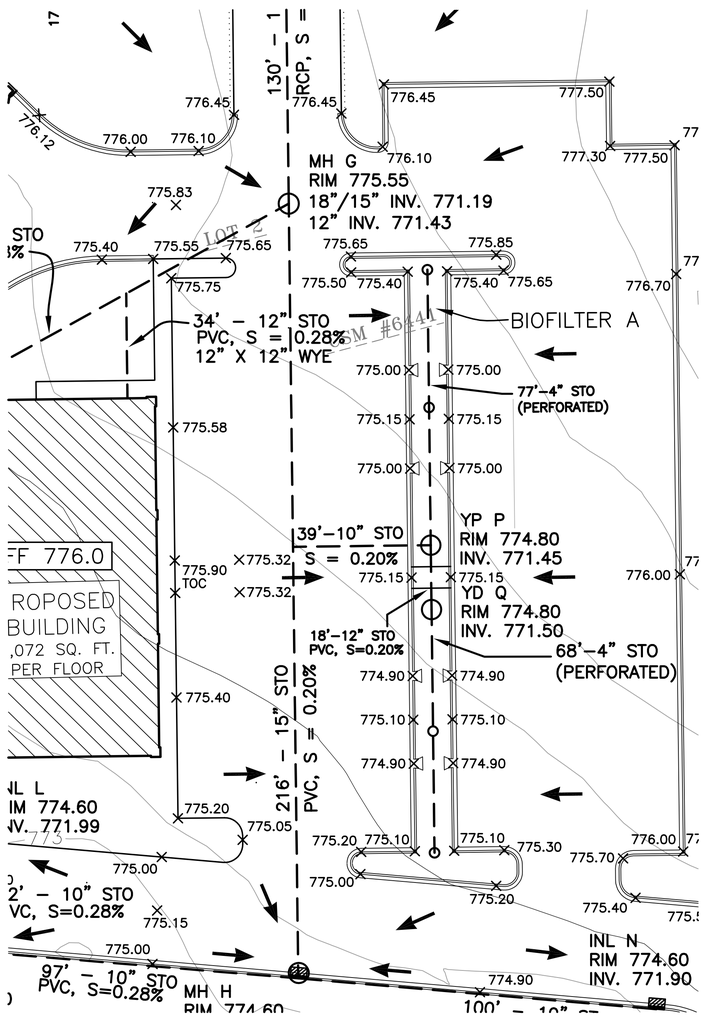

BIOFILTRATION FACILITY NOTES

CONSTRUCTION SITE RUNOFF FROM DISTURBED AREAS SHALL NOT BE ALLOWED TO ENTER THE BIOFILTRATION DEVICE. RUNOFF FROM PERVIOUS AREAS SHALL BE DIVERTED FROM THE DEVICE UNTIL PERVIOUS AREAS HAVE UNDERGONE FINAL STABILIZATION.

CONSTRUCTION SHALL BE SUSPENDED DURING PERIODS OF RAINFALL OR SNOW MELT. CONSTRUCTION SHALL REMAIN SUSPENDED IF PONDED WATER IS PRESENT OR IF RESIDUAL SOIL MOISTURE CONTRIBUTES SIGNIFICANTLY TO THE POTENTIAL FOR SOIL SMEARING, CLUMPING OR OTHER FORM OF COMP ACTION.

COMPACTING AND SMEARING OF THE SOIL BENEATH THE FLOOR AND SIDE SLOPES OF THE BIOFILTRATION AREA , AND COMPACTION OF THE SOILS USED FOR BACK FILL IN THE SOIL PLANTING BED SHALL BE MINIMIZED.

IF COMPACTION OCCURS AT THE BASE OF THE BIOFILTRATION DEVICE, THE SOIL SHALL BE REFRACTURED TO A DEPTH OF AT LEAST 12 INCHES. IF SMEARING OCCURS, THE SMEARED AREAS SHALL BE CORRECTED BY RAKING OR ROTO-TILLING.

PRIOR TO PLACEMENT IN THE BIOFILTRATION DEVICE, THE ENGINEERED SOIL SHALL BE PRE-MIXED AND THE MOISTURE CONTENT SHALL BE LOW ENOUGH TO PREVENT CLUMPING AND COMPACTING DURING PLACEMENT.

THE ENGINEERED SOIL SHALL BE PLACED IN MULTIPLE LIFTS, EACH APPROXIMATELY 12 INCHES IN DEPTH.

STEPS MAY BE TAKEN TO INDUCE MILD SETTLING OF THE ENGINEERED SOIL BED AS NEEDED TO PREPARE A STABLE PLANTING MEDIUM AND TO STABILIZE THE PONDING DEPTH..

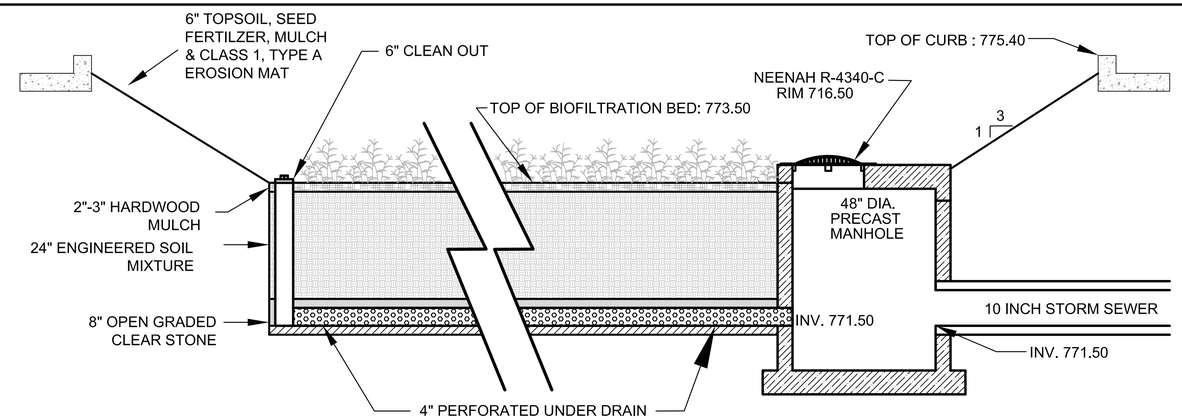

BIOFILTRATION FACILITY - A
NORTH-SOUTH CROSS SECTION

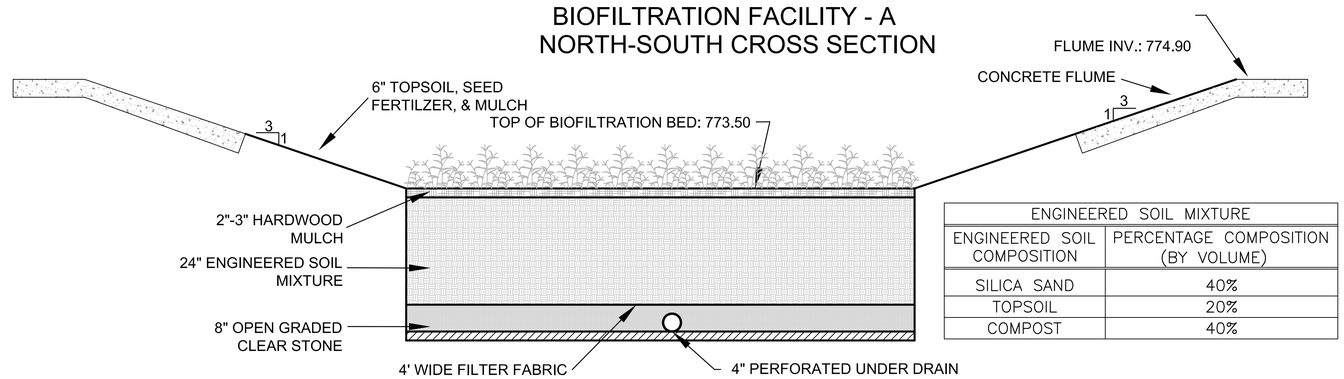

ENGINEERED SOIL MIXTURE	
ENGINEERED SOIL COMPOSITION	PERCENTAGE COMPOSITION (BY VOLUME)
SILICA SAND	40%
TOPSOIL	20%
COMPOST	40%

BIOFILTRATION FACILITY - A
EAST-WEST CROSS SECTION

THE SAND SHALL MEET ONE OF THE FOLLOWING GRADATION REQUIREMENTS:

- USDA COARSE SAND (.02-.04 INCHES)
- ASTM C33 (FINE AGGREGATE CONCRETE SAND)
- WISCONSIN STANDARDS AND SPECIFICATIONS FOR HIGHWAY AND STRUCTURE CONSTRUCTION, SECTION 501.2.5.3.4 (FINE AGGREGATE CONCRETE SAND) 2005 EDITION, OR AN EQUIVALENT APPROVED BY ADMINISTERING AUTHORITY.

THE SAND COMPONENT SHALL CONSIST OF MINERAL SAND THAT IS AT LEAST 97% Si02. SUBSTITUTIONS, SUCH AS CALCIUM CARBONATED SAND, DOLOMITIC SAND, MANUFACTURED SAND OR STONE DUST ARE NOT ALLOWED. THE SAND SHALL BE WASHED TO REMOVE CLAY AND SILT PARTICLES, AND WELL DRAINED PRIOR TO MIXING.

THE TOPSOIL COMPONENT SHALL BE A USDA CLASSIFIED SANDY LOAM, LOAMY SAND OR LOAM TEXTURE. THE TOPSOIL COMPONENT TEXTURAL CLASS SHALL BE VERIFIED BY A LABORATORY ANALYSIS OR A PROFESSIONAL ACCEPTABLE TO THE JURISDICTION HAVING AUTHORITY.

THE COMPOST COMPONENT SHALL MEET THE REQUIREMENTS OF WISCONSIN DEPARTMENT OF NATURAL RESOURCES SPECIFICATION S100, COMPOST.

THE ENGINEERING SOIL MIXTURE SHALL BE FREE OF ROCKS, STUMPS, ROOTS, BRUSH OR OTHER MATERIAL OVER 1 INCH IN DIAMETER. NO OTHER MATERIALS SHALL BE MIXED WITH THE PLANTING SOIL THAT MAY BE HARMFUL TO PLANT GROWTH OR PROVE A HINDRANCE TO PLANTING OR MAINTENANCE.

THE GRAVEL IN THE STORAGE LAYER SHALL MEET THE COURSE AGGREGATE #2 AND OTHER SPECIFICATIONS OF WISCONSIN STANDARDS AND SPECIFICATIONS FOR HIGHWAY AND STRUCTURE CONSTRUCTION, SECTION 501.2.5, 2003 EDITION OR AN EQUIVALENT APPROVED BY THE ADMINISTERING AUTHORITY. GRAVEL SHALL BE DOUBLE WASHED.

THE UNDER DRAIN PIPE SHALL HAVE A DIAMETER OF 6 INCHES AND BE MADE OF FLEXIBLE PIPE OR OTHER MATERIAL APPROVED BY THE ADMINISTERING AUTHORITY. THE UNDER DRAIN PIPE SHALL BE PROTECTED FROM CLOGGING BY USE OF FILTER SOCK,

THE PEA GRAVEL LAYER SHALL BE AT LEAST 4 INCHES THICK. PEA GRAVEL SHALL BE WASHED. PEA GRAVEL SHALL BE LARGE ENOUGH TO PREVENT ITS FALLING THROUGH THE PERFORATIONS IN THE PIPE.

FILTER FABRIC SHALL COVER THE UNDER DRAIN PIPE AND SHALL NOT EXTEND LATERALLY FROM EITHER SIDE OF THE PIPE MORE THAN TWO FEET. THE FABRIC SHALL MEET THE SPECIFICATIONS OF WISCONSIN STANDARD SPECIFICATIONS FOR HIGHWAY AND STRUCTURE CONSTRUCTION, SECTION 645.2.4, SCHEDULE TEST B, 2003 EDITION, OR AN EQUIVALENT APPROVED BY AN ADMINISTERING AUTHORITY.

THE UNDER DRAIN PIPE SHALL HAVE A VERTICAL, CONNECTING STANDPIPE TO SERVE AS A CLEAN-OUT PORT FOR THE UNDER DRAIN PIPE. THE PIPE SHALL BE RIGID, NON-PERFORATED PVC PIPE, A MINIMUM OF 6 INCHES IN DIAMETER AND COVERED WITH A WATERTIGHT CAP THAT IS FLUSH WITH GROUND AT THE ELEVATION OF THE DEVICE.

THE HDPE CLASS A LINER SHALL BE A MINIMU THICKNESS OF 60 MILS AND INSTALLED IN ACCORDANCE WITH NRCS WISCONSIN CONSTRUCTION SPECIFICATION 203. THE CONTRACTOR SHALL INFORM THE ENGINEER PRIOR TO PLACEMENT OF THE LINER SO AN INSPECTION OF THE BED MATERIAL CAN BE MADE. THE CONTRACTOR SHALL ALSO ALLOW INSPECTION OF THE LINER IMMEDIATELY FOLLOWING INSTALLATION PRIOR TO FILLING WITH ENGINEERED FILL MIXTURE.

Martenson & Eisele, Inc.
Planning
Environmental
Surveying
Engineering
Architecture
1377 Midway Road
Menasha, WI 54952
www.martenson-eisele.com
info@martenson-eisele.com
920.731.0381 1.800.236.0381

NO.	DATE	REVISION	DRAWN BY	CHECKED	APPROVED
1	08/24/10	Add north access drive	asm		

POND DETAIL
SUBWAY - MIDWAY ROAD
CITY OF MENASHA, WINNEBAGO COUNTY, WISCONSIN

SCALE	DATE
1" = 20'	04/16/10

COMPUTER FILE
Q:\264363a\Design\264363a.dwg

DRAWING NO.
C5.1

SUBWAY - MIDWAY ROAD: STANDARD DETAILS

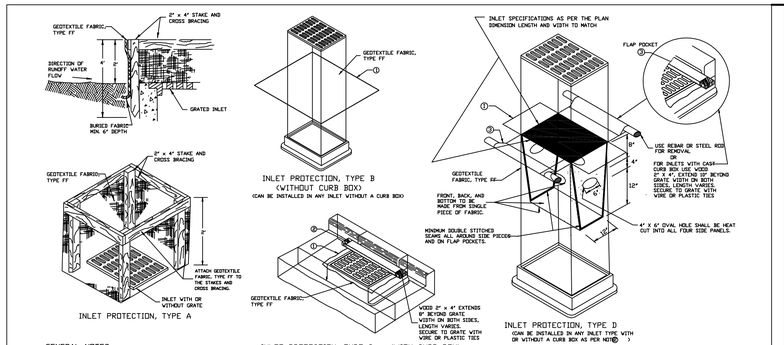

GENERAL NOTES

MANUFACTURED ALTERNATIVES APPROVED AND LISTED ON THE DEPARTMENT'S EROSION CONTROL PRODUCT ACCEPTABILITY LIST MAY BE SUBSTITUTED.

WHEN REMOVING OR MAINTAINING INLET PROTECTION, CARE SHALL BE TAKEN THAT ANY SEDIMENT TRAPPED ON THE GEOTEXTILE FABRIC DOES NOT FALL INTO THE INLET. ANY MATERIAL FALLING INTO THE INLET SHALL BE REMOVED IMMEDIATELY.

① FINISHED SIZE, INCLUDING FLAP POCKETS WHERE REQUIRED, SHALL EXTEND A MINIMUM OF 18" AROUND THE PERIMETER TO FACILITATE MAINTENANCE OR REMOVAL.

② FOR INLET PROTECTION, TYPE C (WITH CURB BOX), AN ADDITIONAL 18" OF FABRIC IS WRAPPED AROUND THE WOOD AND SECURED WITH STAPLES. THE WOOD SHALL NOT BLOCK THE ENTIRE HEIGHT OF THE CURB BOX OPENING.

③ FLAP POCKETS SHALL BE LARGE ENOUGH TO ACCEPT WOOD 2X4.

INSTALLATION NOTES

TYPE B & C

TRIM EXCESS FABRIC IN THE FLOW LINE TO WITHIN 3" OF THE GRATE.

THE CONTRACTOR SHALL DEMONSTRATE A METHOD OF MAINTENANCE, USING A SEWN FLAP, HANG HOLES OR OTHER METHOD TO PREVENT ACCUMULATED SEDIMENT FROM ENTERING THE INLET.

TYPE D

DO NOT INSTALL INLET PROTECTION TYPE D IN INLETS SHALLOWER THAN 30", MEASURED FROM THE BOTTOM OF THE INLET TO THE TOP OF THE GRATE.

TRIM EXCESS FABRIC IN THE FLOW LINE TO WITHIN 3" OF THE GRATE.

THE INSTALLED BAG SHALL HAVE A MINIMUM SIDE CLEARANCE, BETWEEN THE INLET WALLS AND THE BAG, MEASURED AT THE BOTTOM OF THE OVERFLOW HOLES, OF 3". WHERE NECESSARY THE CONTRACTOR SHALL ADJUST THE BAG TO ACHIEVE THE 3" CLEARANCE. THE TIES SHALL BE PLACED AT A MAXIMUM OF 4" FROM THE BOTTOM OF THE BAG.

This drawing based on Wisconsin Department of Transportation Standard Detail Drawing B E 10-2.

INLET PROTECTION
TYPE A, B, C, AND D

INLET PROTECTION DETAIL

NTS

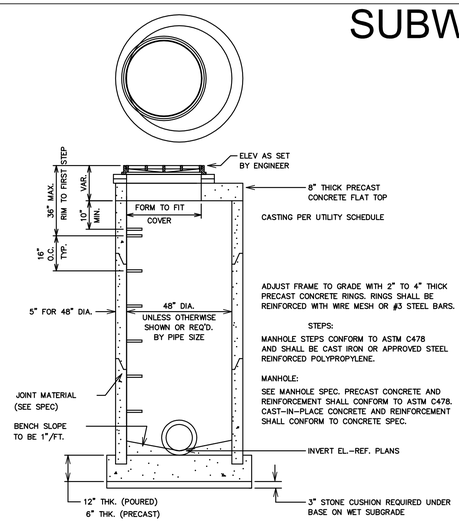

ADJUST FRAME TO GRADE WITH 2" TO 4" THICK PRECAST CONCRETE RINGS. RINGS SHALL BE REINFORCED WITH WIRE MESH OR #3 STEEL BARS.

STEPS:

MANHOLE STEPS CONFORM TO ASTM C478 AND SHALL BE CAST IRON OR APPROVED STEEL REINFORCED POLYPROPYLENE.

MANHOLE:

SEE MANHOLE SPEC. PRECAST CONCRETE AND REINFORCEMENT SHALL CONFORM TO ASTM C478. CAST-IN-PLACE CONCRETE AND REINFORCEMENT SHALL CONFORM TO CONCRETE SPEC.

48" MANHOLE DETAIL

NTS

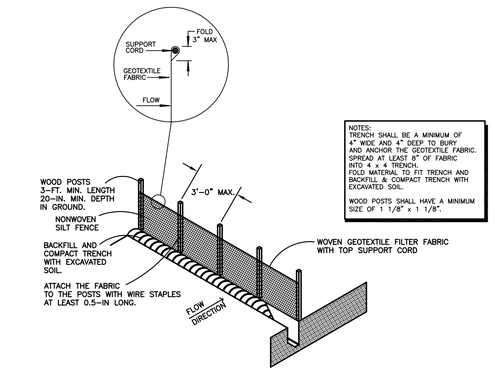

SILT FENCE DETAIL

NTS

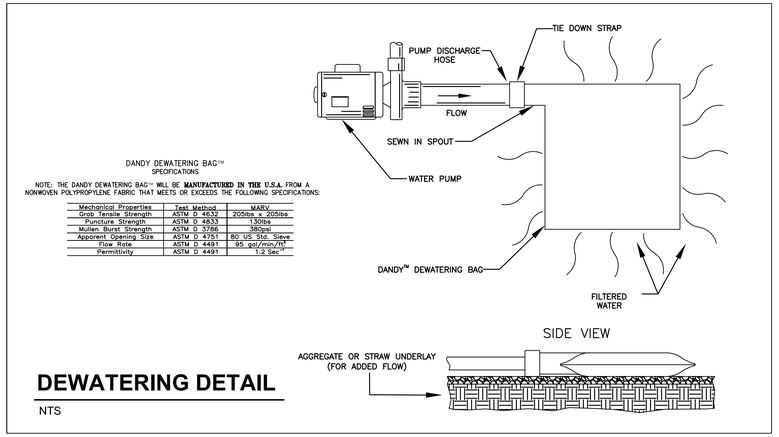

DANDY DEWATERING BAG™ SPECIFICATIONS

NOTE: THE DANDY DEWATERING BAG™ WILL BE **MANUFACTURED IN THE U.S.A.** FROM A NONWOVEN POLYPROPYLENE FABRIC THAT MEETS OR EXCEEDS THE FOLLOWING SPECIFICATIONS:

Mechanical Properties	Test Method	MARV
Grab Tensile Strength	ASTM D 4632	205lbs x 205lbs
Puncture Strength	ASTM D 4833	130lbs
Mullen Burst Strength	ASTM D 3786	380psi
Apparent Opening Size	ASTM D 4751	80 US Std. Sieve
Flow Rate	ASTM D 4491	85 gal/min/ft^2
Permittivity	ASTM D 4491	1.2 Sec^{-1}

DEWATERING DETAIL

NTS

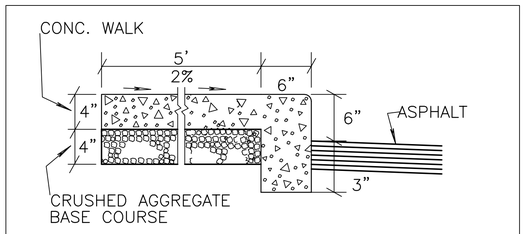

RAISED SIDEWALK DETAIL

NTS

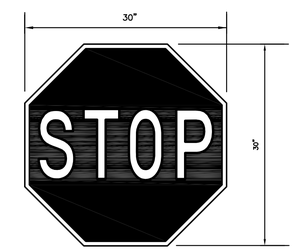

WHITE LEGEND RED BACKGROUND

STOP SIGN DETAIL

NTS

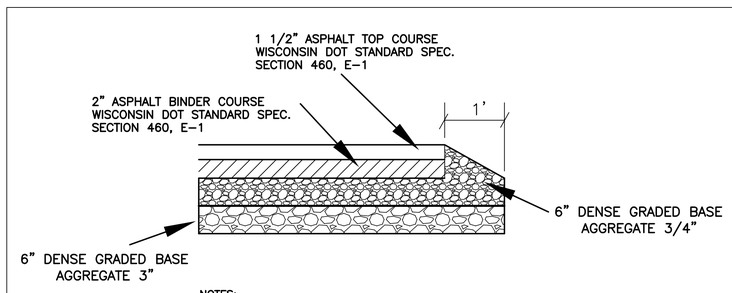

NOTES:
NORTH ACCESS DRIVE WILL BE 32' EDGE OF PAVEMENT TO EDGE OF PAVEMENT WITH 1' GRAVEL SHOULDER. PAVEMENT SHALL HAVE A 2% CROWN SLOPE AND GRAVEL SHOULDER SHALL SLOPE FROM PAVEMENT AT 4%. TOTAL SUBBASE WIDTH SHALL BE 33'.

PAVEMENT/ACCESS DRIVE SECTION

NTS

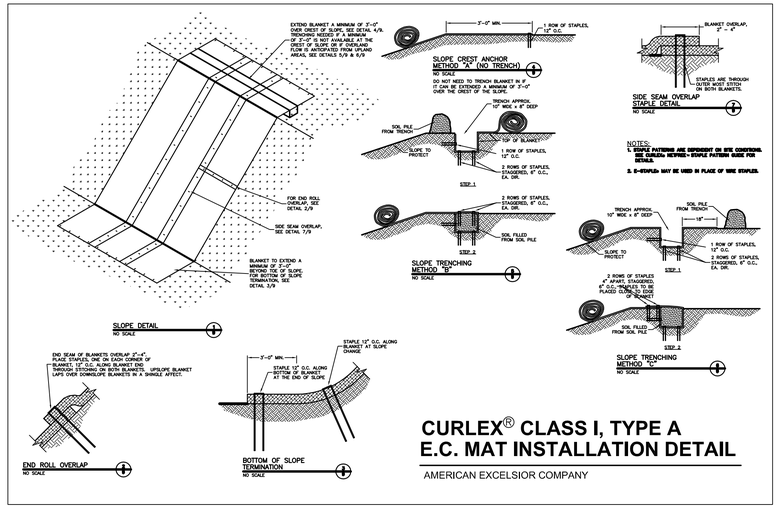

CURLEX® CLASS I, TYPE A E.C. MAT INSTALLATION DETAIL

AMERICAN EXCELSIOR COMPANY

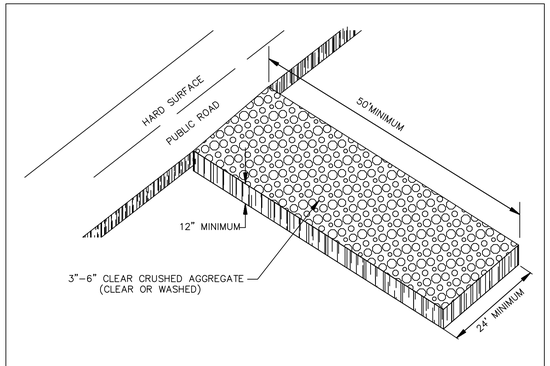

TRACKING PAD: CONST. ENTRANCE

NTS

Martenson & Eisele, Inc.
Planning
Environmental
Surveying
Engineering
Architecture
1377 Midway Road
Menasha, WI 54952
www.martenson-eisele.com
info@martenson-eisele.com
920.731.0381 1.800.236.0381

DRAWN BY	CHECKED	APPROVED
asm		

NO.	DATE	REVISION
1	04/30/10	Revisions Per Meeting w/Brian
2	08/24/10	Add north access road

STANDARD DETAILS
SUBWAY - MIDWAY ROAD
CITY OF MENASHA, WINNEBAGO COUNTY, WISCONSIN

SCALE	DATE
1" = 20'	04/16/10

COMPUTER FILE
Q:\264363a\Design\264363a.dwg

DRAWING NO.
C6.0

SUBWAY - MIDWAY ROAD: LANDSCAPE PLAN

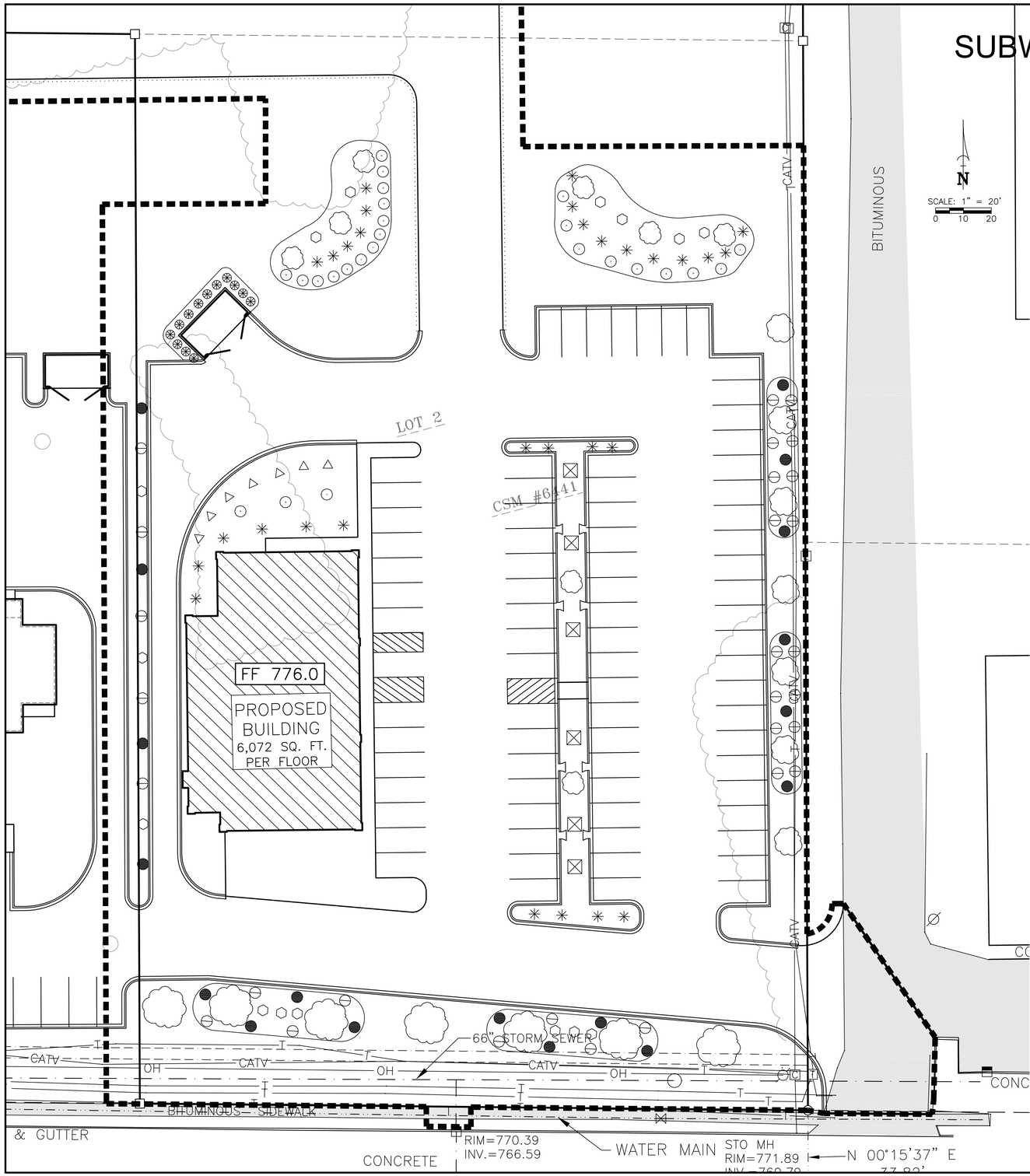

LANDSCAPE LEGEND

- EMERALD GREEN ARBS
- PYGMY ARB GLOBES
- SPIREA
- DAYLILLIES
- SUMMER WINE NINEBARK
- DWARF ARTIC BLUE WILLOW
- MUGO PINE
- PINK POTENTILLA
- TREES

TOPOGRAPHIC LEGEND

■	1" x 18" IRON PIPE SET	—OH—	OVERHEAD POWER LINES	◇◇	GAS VALVE
▲	1-1/4" x 30" REBAR SET	—E—E—	UNDERGROUND ELECTRIC	○	EXIST STORM MANHOLE
×	CHISELED "X" SET	—T—T—	UNDERGROUND TELEPHONE		STORM INLET
○	3/4" REBAR FOUND	—FIBER—	UNDERGROUND FIBEROPTIC		YARD DRAIN
□	1" IRON PIPE FOUND	—G—G—	UNDERGROUND GAS		EXIST SANITARY MANHOLE
△	1-1/4" REBAR FOUND	— CATV —	UNDERGROUND CABLE TV		EXIST. SAN. SEWER
	2" IRON PIPE FOUND	—X—X—	EXIST. FENCE LINE		EXIST. STO. SEWER
	CHISELED "X" FOUND		SIGN		EXIST. WATER MAIN
	GOVERNMENT CORNER		POWER POLE	800.00	EXIST. SPOT ELEVATION
( )	RECORDED AS		GUY		
	CONIFEROUS TREE		LIGHT POLE	800	CONTOUR W/ ELEVATION
	DECIDUOUS TREE		TELEPHONE PEDESTAL	800.00tc	EXIST. TOP OF CURB ELEV.
	EXIST. WOODS LINE		ELECTRIC PEDESTAL	800.00fl	EXIST. FLOW LINE ELEV.
	WETLANDS		CABLE PEDESTAL	FF = 800.00	FIRST FLOOR = 800.00
	SOIL BORING		EXIST. HYDRANT		TOPSOIL DEPTH
			WATER VALVE		INFILTRATION SOIL BORING
			WATER STOP BOX		

Martenson & Eisele, Inc.
Planning
Environmental
Surveying
Engineering
Architecture
1377 Midway Road
Menasha, WI 54952
www.martenson-eisele.com
info@martenson-eisele.com
920.731.0381 1.800.236.0381

NO.	DATE	REVISION	CHECKED	APPROVED

DRAWN BY: gsm

LANDSCAPE PLAN
SUBWAY - MIDWAY ROAD

CITY OF MENASHA, WINNEBAGO COUNTY, WISCONSIN

SCALE	DATE
1" = 20'	04/16/10

COMPUTER FILE
Q:\264363a\Design\264363a.dwg

DRAWING NO.
C7.0

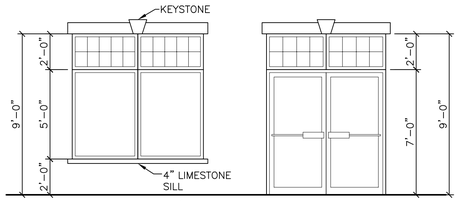

WINDOW/DOOR ELEVATION

SCALE: 1/4"=1'-0"
VERIFY W/ GLASS MANF. SPECS.

SPECIFIED MATERIAL STRENGTHS

1. Poured-in-Place Concrete, f'c
   - Floors — 3000 PSI @ 28 days 1" Stone
   - Foundations — 3000 PSI @ 28 days 1 1/2" Stone
   - Exposed — 3000 PSI @ 28 days Air Entrained 5-7%
2. Reinforcing Steel — ASTM A615
3. Welded Wire Fabric — ASTM A185
4. Structural Steel (unless otherwise noted) — ASTM A-992
5. Steel Tubing
6. Miscellaneous — ASTM A-36
7. Bolts for Structural Connections — ASTM A325, Type N
8. Anchor Bolts — ASTM A307
9. Masonry Grout, f'c — 2500 PSI @ 28 days
10. Masonry Running Bond, f'm — 1500 PSI
11. Timber - #1/ #2 SPF or Equal
    - Timber Studs, Headers and Sills (unless noted)
      - Fb = 875 PSI
      - Fv = 70 PSI
      - Fc = 1050 PSI
      - E = 1,400,000 PSI
    - Machine Stress Rated Lumber
      - Fb = 1650 PSI
      - Fv = 70 PSI
      - Fc = 1700 PSI
      - E = 1,500,000 PSI
12. Allowable Soil Bearing Pressure — 2000 PSF Presumed
    Soil Classification =sandy clay - presumed

DESIGN LOADS

1. SNOW LOAD — GROUND SNOW Pg. 40=PSF
   Ce= 1 Ct= 1
   Is= 1 Cs=1
   SNOW LOAD Pf= Pg x 0.7 x Is x CE x Cs= 28 PSF

ROOF DEAD LOAD

TOP CHORD	ROOF SHINGLES	3 PSF
	SHEATHING	2 PSF
	INSULATION	2 PSF
	WOOD TRUSSES	4 PSF
BOTTOM CHORD	MECHANICAL	2 PSF
	ELECTRICAL	2 PSF
	MISCELLANEOUS	2 PSF
	TOTAL DEAD LOAD	17 PSF

LIVE LOAD

1. OFFICE AREA — 50=PSF +20 PSF PARTITION LOAD
2. CORRIDOR — 80=PSF

SEISMIC REQUIREMENTS

SITE CLASS= D
Ie= 1.0 SDS= .11 SD1= .05

GROUP USE 1
SEISMIC DESIGN CATEGORY= A
SEISMIC BASE SHEAR= 3,400 lbs
SEISMIC RESISTING SYSTEM= BEARING WALL SYSTEM-
K) LIGHT FRAMED CONSTRUCTION W. SHEAR WALLS -WOOD
SEISMIC ANALYSIS PROCEDURE=NOT REQUIRED PER IBC 1616.6 - EXCEPTION 1.

EAST ELEVATION

SCALE: 1/8"=1'-0"

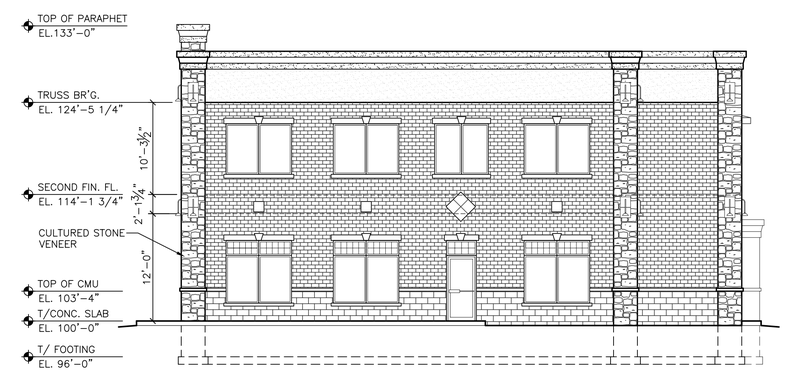

NORTH ELEVATION

SCALE: 1/8"=1'-0"

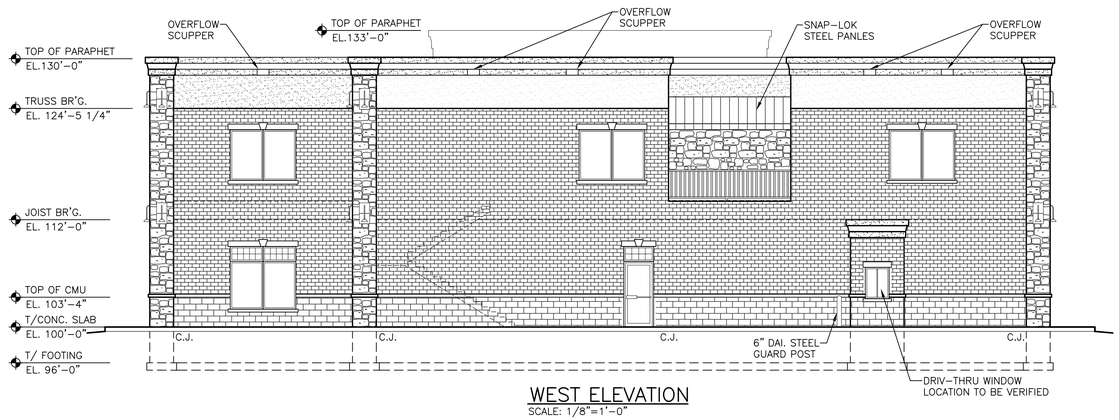

WEST ELEVATION

SCALE: 1/8"=1'-0"

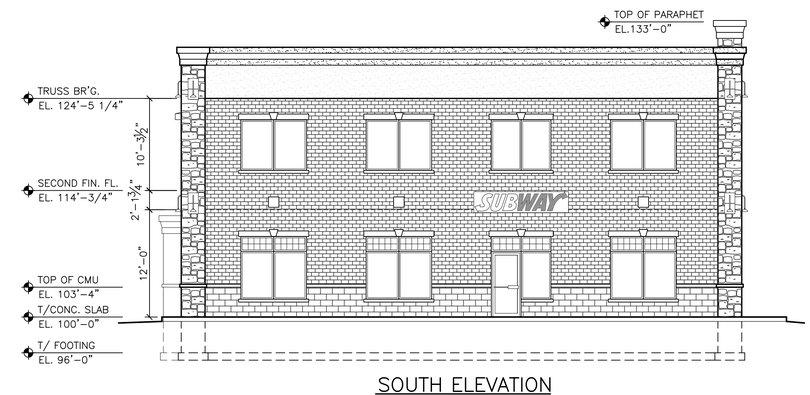

SOUTH ELEVATION

SCALE: 1/8"=1'-0"

UNITED BUILDING SYSTEMS, LLC.
W1988 LINSMEYER ROAD
SEYMOUR, WISCONSIN 54165
(920) 833-1700 FAX (920) 833-1701
DESIGN & BUILD GENERAL CONTRACTOR

REVISIONS:

PROPOSED 5,947 SQ. FT. BUILDING FOR:
BMG PROPERTIES
MENASHA, WISCONSIN
PROJ. MNG.: PAUL WENNINGER
MOBILE: (920) 819-6931
BAY ARCHITECTS, LLC

DATE: 06-28-10
JOB NUMBER: 10-0011
DRAWN BY: M.OLSON

A4

IBC 2902.1 DRINKING FACILITIES ARE REQURIED BASED OT THE TYPE OF OCCUPANCY AND IN THE MINIMUM NUMBER SHOWN IN TABLE 2902.1 DRINKING FOUNTAINS MAY BE OMITTED WHERE OTHER ACCEPTABLE ARRANGEMENTS ARE MADE TO PROVIDE DRINKING WATER. ACCEPTABLE ARRANGEMENTS INCLUDE PROVIDING BOTTLED–WATER COOLERS, PROVIDING A SINK WITH CUPS IN BREAK ROOMS, OR PROVIDING FREE DRINKING WATER SERVICE AT RESTAURANTS. IT IS NOT ACCEPTABLE TO PROVIDE DRINKING WATER INSIDE RESTROOMS OR SERVICE CLOSETS.

NOTE:
IBC 1209.1 PROVIDE TOILET AND BATHING ROOM FLOORS WITH A SMOOTH, HARD, NONABSORBENT SURFACE EXTENDING A MINIMUMM OF 6 INCHES ALONG THE WALL.

IBC 1209.2 PROVIDE TOILET AND BATH ROOM WALLS WITHIN 2 FT OF A URINAL OR TOILET WITH A SMOOTH, HARD, NONABSORBENT SURFACE THAT EXTENDS TO A HEIGHT OF AT LEAST 4 FT.

EGRESS
1. EXITS AND EXIT ACCESS DOORS SHALL BE MARKED BY AN APPROVED EXIT SIGN READILY VISIBLE FROM ANY DIRECTION OF EGRESS TRAVEL. EXITS SIGNS SHALL BE ILLUMINATED.
2. THE SYMBOL TO DENOTE AN EXIT SIGN LOCATION IS THAT OF A CIRCLE CONTAING AN "X".
3. THE MEANS OF EGRESS, INCLUDING THE EXIT DISCHARGE, SHALL BE ILLUMINATED AT ALL TIMES THE BUILDING SPACE SERVED BY THE MEANS OF EGRESS IS OCCUPIED.
4. STAIRWAYS SHALLL HAVE HANDRAILS ON EACH SIDE. HANDRAIL HEIGHT, MEASURED ABOVE STAIR TREAD NOSING, SHALL BE UNIFORM, NOT LESS THAN 34" AND NOT MORE THAN 38".

FIRE EXTINGUISHERS
PORTABLE FIRE EXTINGUISHERS SHALL BE SELECTED, INSTALLED, AND MAINTAINED IN ACCORDANCE WITH IFC 906 AND NFPA 10. FOR OCCUPANCIES OF ORDINARY HAZARD THE MAX. TRAVEL DISTANCE TO A FIRE EXTINGUISHER IS 75'.

RESTROOMS
1. FLOORS SHALL HAVE A SMOOTH, HARD NONABSORBENT SURFACE THAT EXTENDS UPWARD ONTO THE WALLS AT LEAST 6" U.N.O.
2. WALLS WITHIN 2' OF URINALS WNA WATER CLOSETS SHALL HAVE A SMOOTH, HARD, NONABSORBENT SURFACE, TO A HEIGHT OF 4' ABOVE THE FLOOR
3. AT LEAST ONE OF EACH TYPE OF FIXTURE, ELEMENT, CONTROL OR DISPENSER IN EACH ACCESSIBLE TOILET ROOM AND BATHING FACILITY SHALL BE ACCESSIBLE.
4. DOORS TO UNISEX TOILET ROOM SHALL HAVE A PRIVACY LOCK.

ROOM FINISH SCHEDULE

ROOM #	ROOM NAME	FLOORING: CARPET	FLOORING: VINYL COMPOSITION TILE	FLOORING: CERAMIC TILE	FLOORING: CONCRETE	FLOORING: NONE	WALL BASE: VINYL BASE	WALL BASE: CERAMIC TILE BASE	WALL BASE: WOOD	WALL BASE: BLOCK	WALL BASE: NONE	WALLS MATERIAL: SHEETROCK	WALLS MATERIAL: PAINTED CONCRETE BLOCK	WALLS MATERIAL: GLASS BOARD	WALLS MATERIAL: LINER PANEL	WALLS MATERIAL: NONE	CEILINGS MATERIAL: SHEETROCK	CEILINGS MATERIAL: ACOUSTIC CEILING TILE	CEILINGS MATERIAL: VINYL FACED GYPSUM BOARD	CEILINGS MATERIAL: LINER PANEL	CEILINGS MATERIAL: NONE	FINISHED HEIGHT	REMARKS
101	DINING								○			Ⓟ						Ⓐ				9'–10"	
102	PREP. AREA			○			○							○					○			9'–10"	
103	VESTIBULE			○				○				Ⓟ						Ⓐ				9'–10"	
104	MECHANICAL				○						○	Ⓟ					○					12'–0"	
105	ELEVATOR MECH.																○					12'–0"	SHEET ROCK CEILING
106	ELEVATOR													○								8'–0"	SEE ELEVATOR MANF. SPECS.
107	MEN'S TOILET			○				○				Ⓟ							○			8'–0"	
108	WOMEN'S TOILET			○				○				Ⓟ							○			8'–0"	
109	VESTIBULE			○			○					Ⓟ						Ⓐ				9'–10"	U.L. DESIGN 528 (1 HR. CEILING)
110	UNIT B	○					○					Ⓟ						Ⓐ				9'–10"	

COMMENTS
Ⓟ – PLASTER/PAINT
Ⓢ – CONCRETE SEALER
Ⓐ – ACOUSTIC CEILING – 2' x 2' REVEALED EDGE
Ⓑ – ACOUSTIC CEILING – 2' x 4' FLAT

HARDWARE NOTES:
1. ENTRY LOCK
2. PASSAGE LOCK
3. STORAGE LOCK
4. PRIVACY LOCK
5. CYLINDER
6. CLOSER
7. WALL STOP
8. OVERHEAD STOP
9. FLOOR STOP
10. WEATHER STRIPPING
11. KICK PLATE
12. PUSH PULL

DOOR SCHEDULE

DOOR NUMBER	DOOR SIZES	ROUGH OPENING	DOOR MATERIAL	DOOR TYPE	DOOR FINISH	FRAME MATERIAL	FRAME TYPE	FRAME FINISH	HARDWARE NOTES	RATING	GENERAL NOTES
101.1	36"	37 1/4" x 81 1/8"	WOOD	–	STAINED	STEEL	–	PRE–FIN.	PRIVACY LOCK		TIMELY DOOR (1 HR. RATING)
101.2	(2) 36"	76 1/2" x 108"	ALUMINUM	–	PRE–FIN.	ALUMINUM	–	PRE–FIN.	ENTRY LOCK		GLASS ENTRY DOORS
101.3	36"	40 1/2 x 108"	ALUMINUM	–	PRE–FIN.	ALUMINUM	–	PRE–FIN.	ENTRY LOCK		GLASS ENTRY DOOR
101.4	36"	37 1/4" x 81 1/8"	WOOD	–	STAINED	STEEL	–	PRE–FIN.	PRIVACY LOCK		TIMELY DOORS
102.1	36"	–	STEEL	–	PAINTED	STEEL	–	PAINTED	PASSAGE		1 HR. RATING
103.1	36"	–	STEEL	–	PAINTED	STEEL	–	PAINTED	PASSAGE		1 HR. RATING
103.2	36"	37 1/4" x 81 1/8"	WOOD	–	STAINED	STEEL	–	PRE–FIN.	PRIVACY LOCK		TIMELY DOORS
103.3	36"	37 1/4" x 81 1/8"	WOOD	–	STAINED	STEEL	–	PRE–FIN.	PRIVACY LOCK		TIMELY DOORS
103.4	36"	40 1/2" x 108"	ALUMINUM	–	PRE–FIN.	ALUMINUM	–	PRE–FIN.	ENTRY LOCK		GLASS ENTRY DOOR
104.1	36"	37 1/4" x 81 1/8"	WOOD	–	STAINED	STEEL	–	PRE–FIN.	PRIVACY LOCK		TIMELY DOOR
105.1	36"	37 1/4" x 81 1/8"	WOOD	–	STAINED	STEEL	–	PRE–FIN.	PRIVACY LOCK		TIMELY DOOR
106.1	48"	48" x 84"	–	–	PRE–FIN	–	–	PRE–FIN.			SEE ELEV. SPECS.
107.1	36"	37 1/4" x 81 1/8"	WOOD	–	PRE–FIN	STEEL	–	PRE–FIN	PASSAGE		TIMELY DOOR (1 HR. RATING)
108.1	36"	37 1/4" x 81 1/8"	WOOD	–	PRE–FIN	STEEL	–	PRE–FIN	PASSAGE		TIMELY DOOR (1 HR. RATING)
109.1	(2) 36"	76 1/2" x 108"	ALUMINUM	–	PRE–FIN.	ALUMINUM	–	PRE–FIN.	ENTRY LOCK		GLASS ENTRY DOORS
109.2	36"	–	STEEL	–	PAINTED	STEEL	–	PAINTED	PASSAGE		1 HR. RATING
110.1	36"	–	STEEL	–	PAINTED	STEEL	–	PAINTED	PASSAGE		1 HR. RATING
110.2	36"	40 1/2 x 108"	ALUMINUM	–	PRE–FIN.	ALUMINUM	–	PRE–FIN.	ENTRY LOCK		GLASS ENTRY DOOR
110.3	36"	40 1/2 x 108"	ALUMINUM	–	PRE–FIN.	ALUMINUM	–	PRE–FIN.	ENTRY LOCK		GLASS ENTRY DOOR
110.4	36"	37 1/4" x 81 1/8"	WOOD	–	STAINED	STEEL	–	PRE–FIN.	PRIVACY LOCK		TIMELY DOOR (1 HR. RATING)

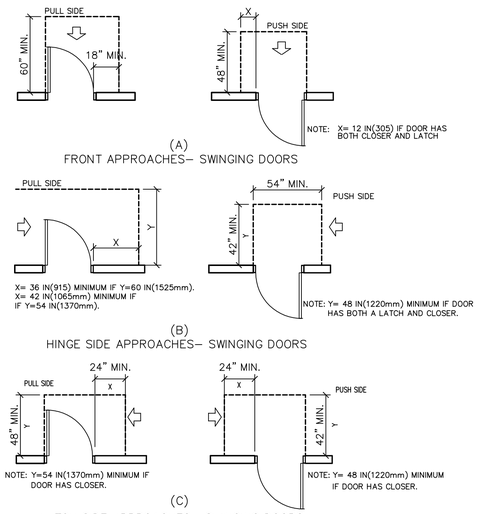

NOTE: ALL DOORS IN ABOVE SHALL COMPLY WITH THE CLEARANCES FOR FRONT APPROACHES.

MANEUVERING CLEARANCES AT DOORS
NOTE: ALL DOOR HANDLES SHALL BE LEVER OR LOOP TYPE

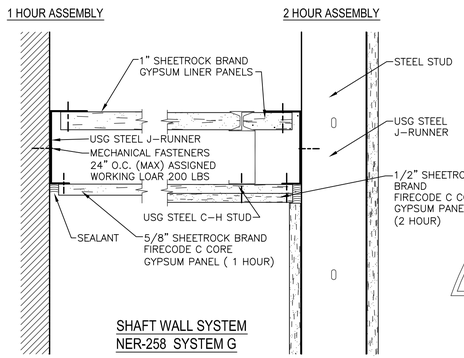

SHAFT WALL SYSTEM
NER-258 SYSTEM G

BUILDING SQUARE FOOTAGE
FIRST FLOOR: 5,947 S.F.
SECOND FLOOR: 5,780 S.F.
TOTAL FLOOR AREA: 11,727 S.F.

CONSTRUCTION AND OCCUPANCY TYPE
OCCUPANCY TYPE: BUSINESS (B)
CONSTRUCTION TYPE: 5B

NOTE!
ALL TOILET ROOM FINISHES SHALL BE IMPERVIOUS TO WATER. ALL HEATING EQUIPMENT SHALL BE SEALED COMBUSTION, DIRECT VENT OR ELECTRIC.

IMPORTANT NOTE:
IT IS AGREED THAT ALTHOUGH EVERY EFFORT HAS BEEN MADE IN PREPARING AND CHECKING THESE PLANS FOR ACCURACY, THE GENERAL CONTRACTOR/OWNER MUST REVIEW ALL DIMENSIONS, DETAILS AND NOTES BEFORE BEGINNING ANY CONSTRUCTION AND IS HEREBY HELD RESPONSIBLE FOR ANY DISCOVERED DISCREPANCIES.

BOTTLED DRINKING WATER
PROVIDE BOTTLED DRINKING WATER AS SHOWN ON PLAN WITH CUP DISPENSER PER ANSI 117 SPECS.

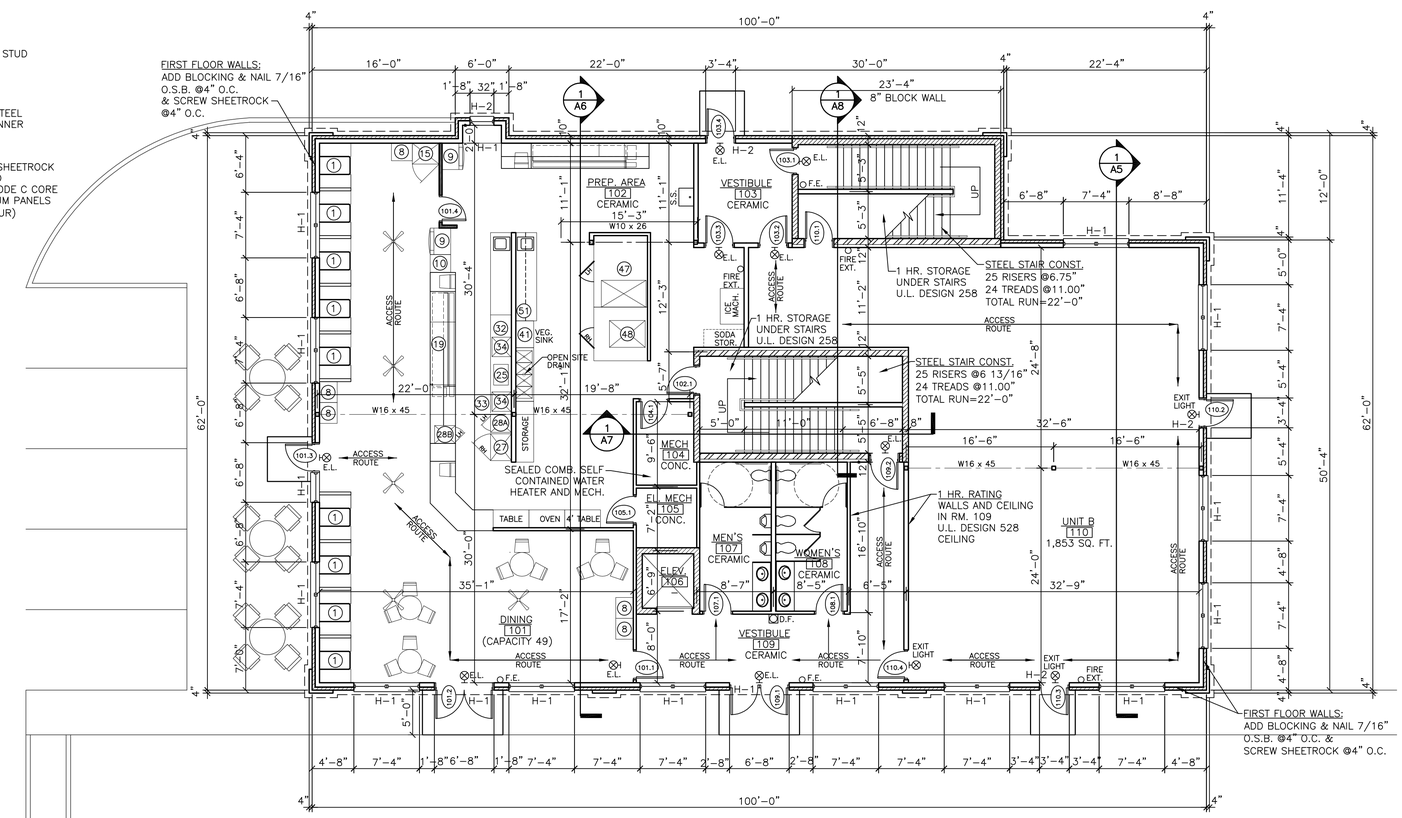

NOTE:
ALL ROOMS ARE HANDICAP ACCESSIBLE

FLOOR PLAN
SCALE: 1/8"=1'–0"

INTERIOR WALL CONSTRUCTION
2x4 STUD WALL @ 16" O/C WITH SOUND BATT INSULATION AND MIN. 1/2" GYP. BOARD EACH SIDE. UNLESS OTHERWISE NOTED.

MATERIAL SCHEDULE AND SYMBOLS
- POURED CONCRETE
- 4" BRICK VENEER
- 2x6 STUD WALL 16" O.C.
- F.E FIRE EXTINGUISHER
- E.L. EXIT LIGHT
- D.S. DOWNSPOUT LOCATION TO STORM
- F.D FLOOR DRAIN
- BOTTLED WATER

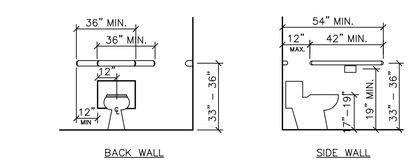

CLEARANCES
N.T.S.

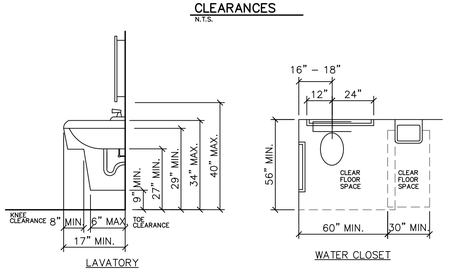

ACCESSIBLE GUIDELINES
THE DIAGRAM BELOW SHOWS RECOMMENDED MOUNTING HEIGHTS FOR MANY WASHROOM ACCESSORIES. A MINIMUM 30" X 48" CLEAR FLOOR SPACE IS REQUIRED IN FRONT OF ALL ACCESSIBLE FIXTURES AND ACCESSORIES.

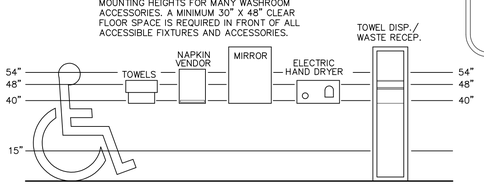

QUICK REFERENCE GUIDELINES
(BE SURE TO REFERENCE WITH ADA CODE)

JOB SITE LOCATION
BMG PROPERTIES–MENASHA
MIDWAY ROAD– CTH "AP"
MENASHA, WISCONSIN 54952

PROJECT ARCHITECT
BAY ARCHITECTS, LLC
3019 HOLMGREN WAY
GREEN BAY, WI 54304
(920) 337–9400

HEADER SCHEDULE

MARK	MEMBER	SHOULDER STUDS	KING STUDS	NOTE
H–1	3–PLY 10" L.V.L.	2 PLY 2x6	2 PLY 2x6	5 ROWS 16d @6" O.C. PER PLY
H–2	3–PLY 2x10 D.F.	1 PLY 2x6	1 PLY 2x6	3 ROWS 16d @6" O.C. PER PLY
H–3	3–PLY 2x14 L.V.L.	2 PLY 2x6	2 PLY 2x6	5 ROWS 16d @6" O.C. PER PLY

UNITED BUILDING SYSTEMS, LLC.
W1988 LINSMEYER ROAD
SEYMOUR, WISCONSIN 54165
(920) 833–1700 FAX (920) 833–1701
DESIGN & BUILD GENERAL CONTRACTOR

REVISIONS:
1

PROPOSED 5,947 SQ. FT. BUILDING FOR:
BMG PROPERTIES
MENASHA, WISCONSIN
PROJ. MNG.: PAUL WENNINGER
MOBILE: (920) 819–6931
BAY ARCHITECTS, LLC

DATE: 06–28–10
JOB NUMBER: 10–0011
DRAWN BY: M.OLSON

A2

RUUD LIGHTING®

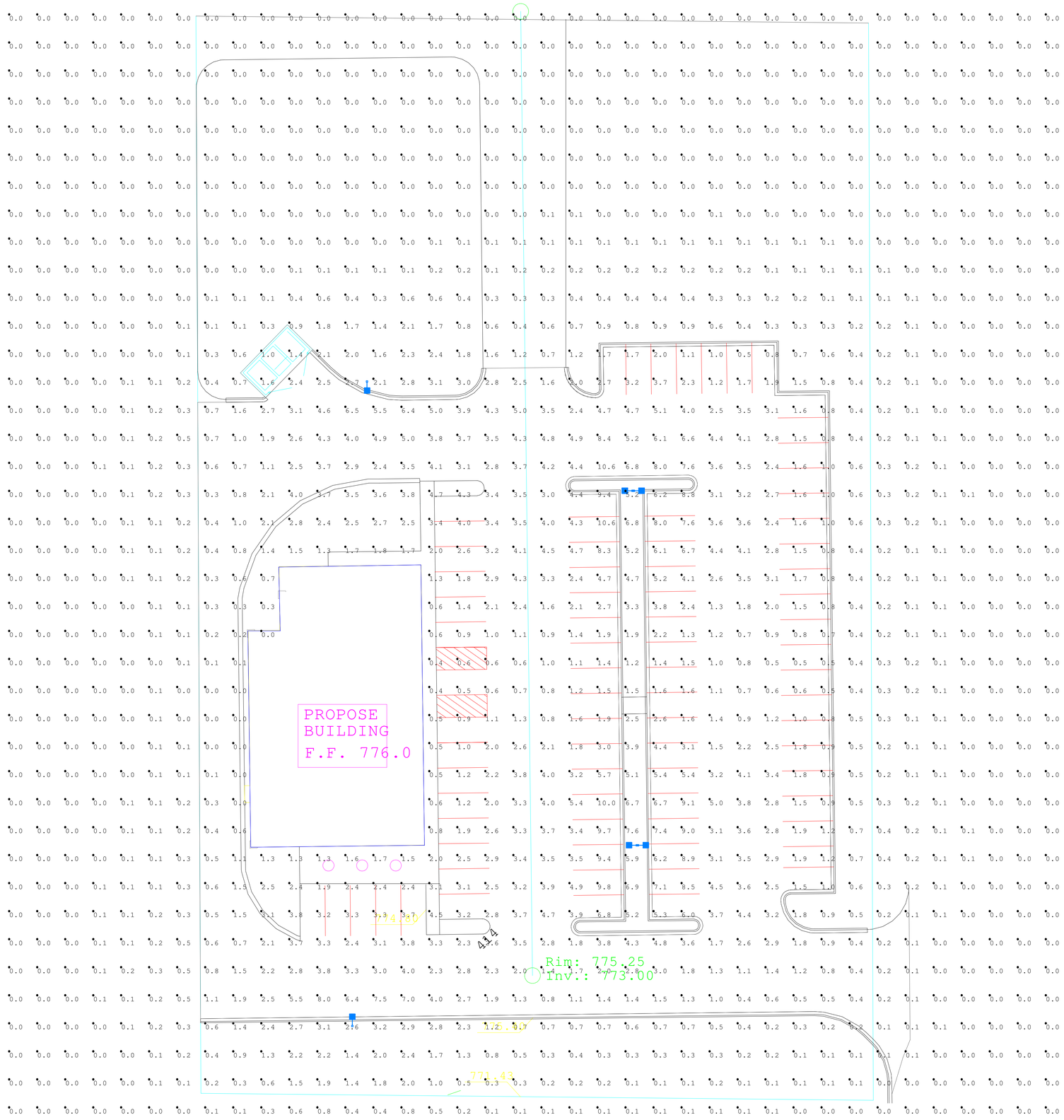

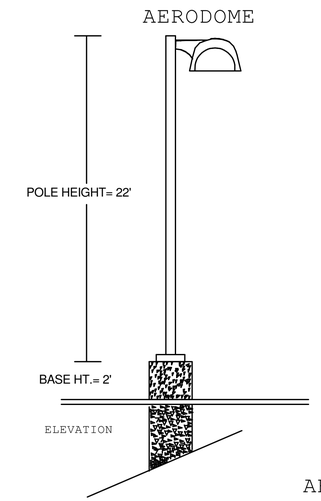

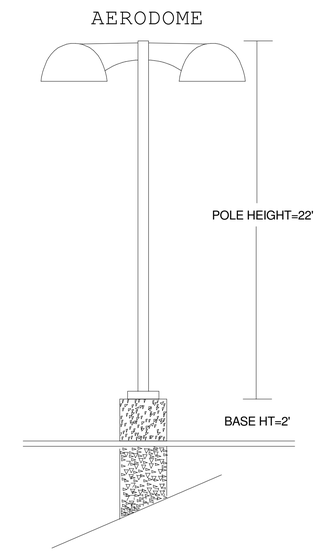

Parking Area

Illuminance (Fc)
Average = 3.24
Maximum = 10.6
Minimum = 0.5
Avg/Min Ratio = 6.48
Max/Min Ratio = 21.20

Pole Schedule
(2) PS4S22C1BZ (22' X 4" Sq. Steel Pole)
(2) PS4S22C2BZ (22' X 4" Sq. Steel Pole)
Proposed poles meet 110 MPH sustained winds.

Luminaire Schedule

Symbol	Qty	Label	Arrangement	Lumens/Lamp	LLF	Arr. Watts	Description
	2	AVV4	SINGLE	44000	0.750	450	AVV40640-M (400W PSMH)
	2	AVV42	BACK-BACK	44000	0.750	900	AVV40640-M (400W PSMH)

Calculation Summary

Label	Avg	Max	Min	Avg/Min	Max/Min
GRADE	1.01	10.6	0.0	N.A.	N.A.
Parking Area	3.24	10.6	0.5	6.48	21.20

RUUD LIGHTING®
9201 Washington Ave
Racine, WI 53406
PH: (800) 236-7000
FX: (800) 236-7500
www.ruudlighting.com

Date:8/13/2010 | Scale: 1"=20' | Layout by:Dan Walter
Project Name:BMG Project | Customer No:62959
Filename: V:\Common\AppEng\OUT\100813CE1DCW.AGI
Footcandles calculated at grade using mean lumen values

Illumination results shown on this lighting design are based on project parameters provided to Ruud Lighting used in conjunction with luminaire test procedures conducted under laboratory conditions. Actual project conditions differing from these design parameters may affect field results. The customer is responsible for verifying compliance with any applicable electrical, lighting, or energy code.