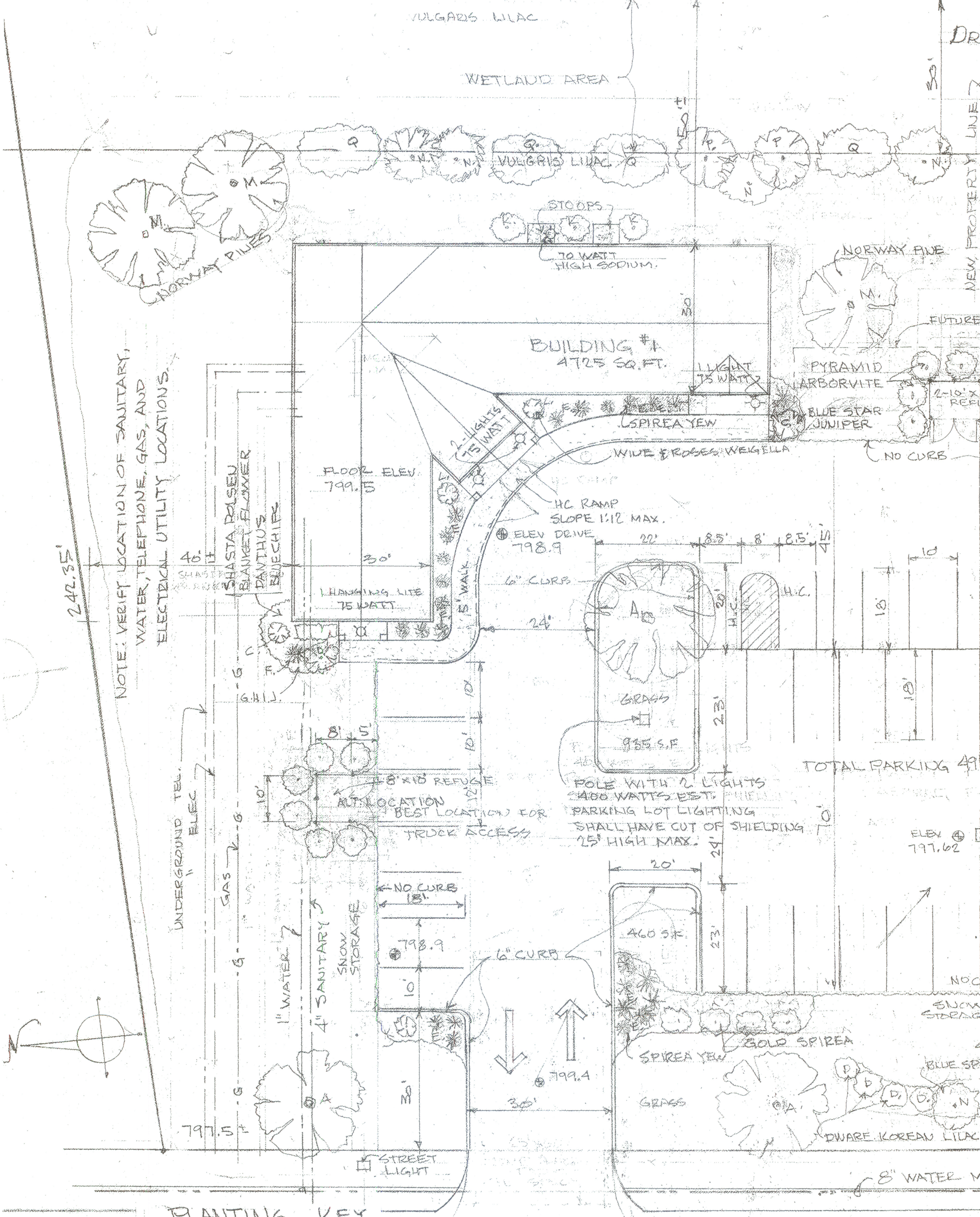

PLANTING KEY

A. NEWPORT PLUM.
B. PYRAMID ARBORVITE
C. BLUE STAR JUNIPER
D. DWARF KOREAN LILAC
E. SPIREA YEW
F. GOLD SPIREA
G. SHASTA DALSEN
H. BLANKET FLOWER
I. DIANTHUS
J. BLUECHIPS
K. GLOBE ARBORVITE
L. WINE & ROSES WEIGELLA
M. NORWAY PINE
N. BLUE SPRUCE
P. DARK GREEN ARBORVITE
Q. VULGARIS LILAC

SITE PLAN 20' = 1"

LANDSCAPING & LIGHTING PLAN FOR
SALON ETERNITY

OFFICE OF
STANLEY JON BYE - ARCHITECT
950 GAIL AVE. - NEENAH, WI. 54956
PH. 920-722-5577

SEPT 9, 2010

COOPER LIGHTING - METALUX®

DESCRIPTION

The floating appearance of the Softside Cloud complements any décor with a non-glaring illumination. The low profile of the frameless diffuser allows the fixture to blend in with it's surroundings. The Softside Cloud is an ideal choice for a variety of commercial applications.

Catalog #		Type
Project		
Comments		Date
Prepared by		

SPECIFICATION FEATURES

A···Construction

Housing is manufactured with die formed cold rolled steel. Ends are formed for added strength. Ballast cover is removable without tools.

B···Electrical*

Universal Instant Start Commercial Grade Ballast. CBM/ETL Class "P" Listed. UL/cUL listed. Rotor lock lamp-holders. Suitable for damp locations.

C···Finish

Multistage pre-paint ensures maximum bonding and rust prevention.

D···Shielding

Utilizes a trademark Tuff'R'Puff commercial grade acrylic lens that is formulated to protect against lens breakage and 'yellowing' discoloration. Snap fit for ease of service and relamping.

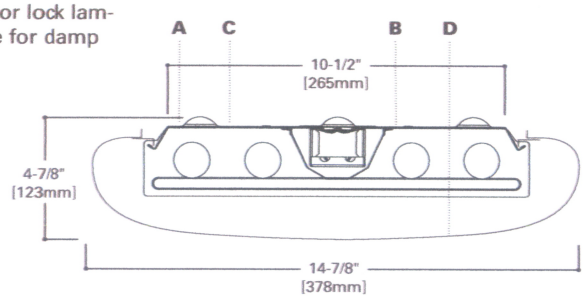

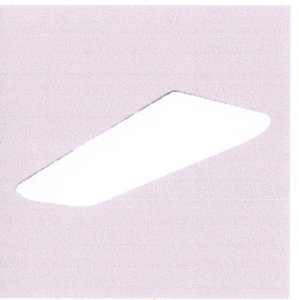

WSC SERIES
232
432

1' x 4', 1-1/2' x 4'
2 or 4 T8 Lamps

Modular Fluorescent
Softside Cloud

LAMP CONFIGURATIONS

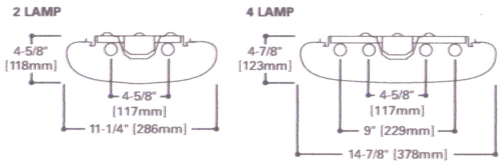

LENS

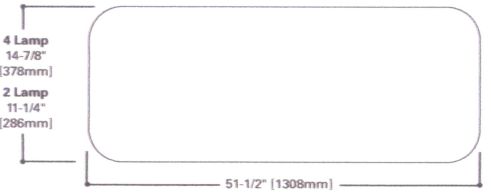

MOUNTING DATA

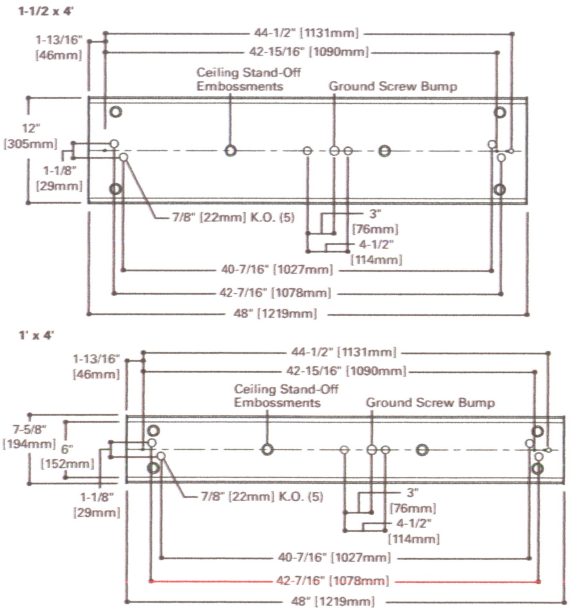

ENERGY DATA

Input Watts:

EB Ballast & STD Lamps
232 (54)
432 (110)

Luminaire Efficacy Rating
LER = FL64
Catalog Number: WSC-232

Yearly Cost of 1000 lumens, 3000 hrs at .08 KWH = $3.28

**Reference the lamp/ballast data in the Technical Section for specific lamp/ballast requirements.

LAMPS CONTAIN MERCURY. DISPOSE ACCORDING TO LOCAL, STATE OR FEDERAL LAWS

LINEAR DISCONNECT
Safe and convenient means of disconnecting power.

PHOTOMETRICS

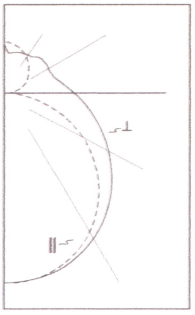

WSC-232
Electronic Ballast
(2) F32T8 Lamps
2800 Lumens each
Spacing criterion: (II) 1.3 x mounting height, (⊥) 1.3 x mounting height
Efficiency 70.5%
Test Report: P20017
LER = FL64
Yearly Cost of 1000 lumens, 3000 hrs at .08 KWH = $3.28

Candlepower

Angle	Along II	45°	Across ⊥
0	812	812	812
5	811	811	809
10	802	804	804
15	787	791	794
20	764	772	778
25	735	747	756
30	700	717	730
35	658	682	700
40	611	642	665
45	559	598	628
50	501	551	587
55	440	501	545
60	375	449	504
65	308	399	464
70	240	350	425
75	174	306	387
80	111	265	352
85	58	229	320
90	22	199	290

Coefficients of Utilization

Effective floor cavity reflectance 20%

rc	80%				70%				50%			30%			10%			0%
rw	70	50	30	10	70	50	30	10	50	30	10	50	30	10	50	30	10	0
RCR																		
0	79	79	79	79	75	75	75	75	68	68	68	61	61	61	55	55	55	52
1	71	67	63	60	67	63	60	58	57	55	52	51	49	47	46	44	43	40
2	64	58	52	48	60	55	50	46	49	45	42	44	41	38	39	37	35	32
3	58	50	44	39	55	48	42	38	43	38	35	38	35	32	34	31	29	27
4	53	44	38	33	50	42	36	32	38	33	29	34	30	27	30	27	24	22
5	48	39	33	28	46	37	31	27	34	29	25	30	26	23	27	24	21	19
6	44	35	29	24	42	33	27	23	30	25	22	27	23	20	25	21	18	16
7	41	32	25	21	39	30	24	20	27	22	19	25	21	18	22	19	16	14
8	38	29	23	19	36	27	22	18	25	20	17	23	19	16	20	17	14	13
9	36	26	20	17	34	25	20	16	23	18	15	21	17	14	19	15	13	11
10	33	24	19	15	31	23	18	14	21	17	13	19	15	13	17	14	12	10

Zonal Lumen Summary

Zone	Lumens	%Lamp	%Fixture
0-30	645	11.5	16.3
0-40	1071	19.1	27.1
0-60	1976	35.3	50.1
0-90	2908	51.9	73.7
0-180	3947	70.5	100.0

Luminance Data

Angle in Deg	Average 0-Deg cd/sm	Average 45-Deg cd/sm	Average 90-Deg cd/sm
45	1885	1769	1654
55	1769	1687	1579
65	1593	1617	1547
75	1317	1619	1575
85	867	1825	1738

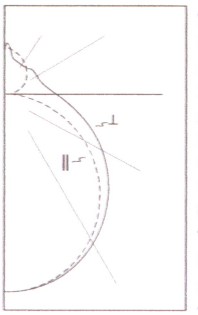

WSC-432
Electronic Ballast
(2) F32T8 Lamps
2800 Lumens each
Spacing criterion: (II) 1.3 x mounting height, (⊥) 1.3 x mounting height
Efficiency 61.6%
Test Report: P20021
LER = FL55
Yearly Cost of 1000 lumens, 3000 hrs at .08 KWH = $3.83

Candlepower

Angle	Along II	45°	Across ⊥
0	1544	1544	1544
5	1542	1541	1543
10	1525	1528	1531
15	1496	1502	1510
20	1453	1465	1475
25	1399	1415	1429
30	1333	1355	1373
35	1254	1286	1309
40	1166	1207	1237
45	1069	1121	1159
50	962	1028	1075
55	848	929	988
60	728	828	898
65	604	725	807
70	479	624	715
75	355	526	626
80	238	435	544
85	134	358	473
90	61	299	416

Coefficients of Utilization

Effective floor cavity reflectance 20%

rc	80%				70%				50%			30%			10%			0%
rw	70	50	30	10	70	50	30	10	50	30	10	50	30	10	50	30	10	0
RCR																		
0	70	70	70	70	67	67	67	67	61	61	61	55	55	55	50	50	50	48
1	63	59	56	54	59	56	54	51	51	49	47	46	45	43	42	41	40	37
2	57	51	46	43	54	49	45	41	44	41	38	40	37	35	36	34	32	30
3	51	44	39	35	48	42	38	34	39	35	31	35	32	29	32	29	27	25
4	47	39	34	29	44	37	32	28	34	30	26	31	27	25	28	25	23	21
5	43	35	29	25	41	33	28	24	30	26	23	28	24	21	25	22	20	18
6	39	31	26	22	37	30	25	21	27	23	20	25	21	18	23	20	17	16
7	36	28	23	19	35	27	22	18	25	20	17	23	19	16	21	18	15	14
8	34	26	20	17	32	25	20	16	23	18	15	21	17	14	19	16	13	12
9	32	23	18	15	30	22	18	14	21	17	14	19	15	13	17	14	12	11
10	30	21	17	13	28	21	16	13	19	15	12	18	14	12	16	13	11	10

Zonal Lumen Summary

Zone	Lumens	%Lamp	%Fixture
0-30	1225	10.9	17.7
0-40	2029	18.1	29.4
0-60	3719	33.2	53.9
0-90	5334	47.6	77.3
0-180	6902	61.6	100.0

Luminance Data

Angle in Deg	Average 0-Deg cd/sm	Average 45-Deg cd/sm	Average 90-Deg cd/sm
45	2789	2664	2529
55	2636	2545	2419
65	2414	2431	2331
75	2075	2366	2289
85	1543	2564	2458

ORDERING INFORMATION

SAMPLE NUMBER: WSC-232-D-W-UNV-EB81-U

Series
WSC=Softside Cloud

Number of Lamps
2=2 Lamps (Not Included)
4=4 Lamps (Not Included)

Wattage (Length)
32=32W T8 (48")

Diffuser/Lens
D=Dropped

Frame Finish
W=White

Voltage [1]
120V=120 Volt
277V=277 Volt
347V=347 Volt
UNV=Universal Voltage 120-277 [2]

Options
GL=Single Element Fuse
GM=Double Element Fuse
EL=Emergency Installed [3]

Ballast Type [1]
EB8_=T8 Electronic Instant Start. Total Harmonic Distortion < 10%
No. of Ballast 1 or 2
EB8_/PLUS= T8 Electronic Instant Start. High Ballast Factor >1.13. Total Harmonic Distortion < 10%
No. of Ballast 1 or 2
ER8_=T8 Electronic Program Rapid Start. Total Harmonic Distortion < 10%
No. of Ballast 1 or 2
ER8_/PLUS=T8 Electronic Program Start. High Ballast Factor >1.13 Total Harmonic Distortion < 10%
No. of Ballast 1 or 2
HPT8 Ballast
HB8_L=T8 Electronic Instant Start. Low Ballast Factor .77
HB8_=T8 Electronic Instant Start. Ballast Factor .88
HB8_N=T8 Electronic Instant Start. Normal Ballast Factor 1.0
HB8_H=T8 Electronic Instant Start. High Ballast Factor 1.15-1.2
HR8_DIM=T8 Electronic Program Start Step Dimming. Ballast Factor .88
HR8_L=T8 Electronic Program Start. Low Ballast Factor .77
HR8_=T8 Electronic Program Start. Ballast Factor .88
HR8_H=T8 Electronic Program Start. High Ballast Factor 1.15-1.2

Packaging
U=Unit Pack

NOTES: [1] Products also available in non-US voltages and frequencies for international markets. 120V must be specified with a residential ballast. [2] Not available when specifying emergencies, voltage must be specific. [3] A low profile battery pack is required for installation with standard ballast cover (consult Cooper Lighting).

For complete product data, reference the Fluorescent Specification binder. Specifications & dimensions subject to change without notice. Consult your Cooper Lighting Representative for availability and ordering information.

SHIPPING INFORMATION

Catalog No.	Wt.
WSC-232	13 lbs.
WSC-432	17 lbs.

AL™ AREA LIGHT INSTALLATION INSTRUCTIONS

MOUNTING (1) AL FIXTURE TO BTA ADAPTOR

Fixed Arm mounting to RAB's pole top adaptor,

1. Loosen (4) door screws, open fixture. Remove ballast cover.
2. Insert **Threaded Rods** into the **Adaptor**.
3. Feed wires from fixture through **Gasket**, **Arm** and 2nd **Gasket** and into **Adaptor**. Make connections and push wires into the adaptor. Wires should be knotted as a strain relief.
4. Line up extrusion slots with the **Threaded Rods** and slide **Arm** and fixture on **Threaded Rods.**
5. Place flat washer, lock washer and nuts on each **Threaded Rod** inside the fixture. Tighten securely.
6. Place **Adaptor** over **2 3/8" Tenon** and tighten set screws on **Adaptor.**

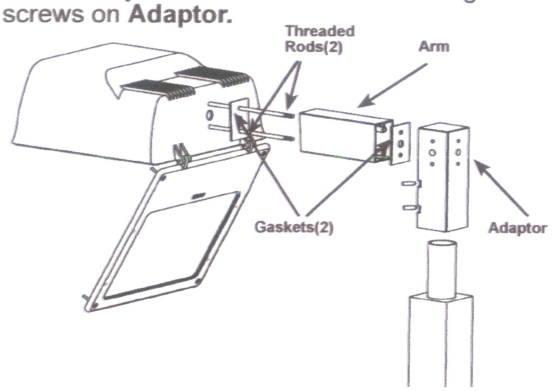

MOUNTING (2) AL FIXTURES AT 90° TO BTA ADAPTOR

Fixed Arm mounting to BTA90 for mounting 2 fixtures at 90 degrees as shown below.

See steps 1-6 in **"MOUNTING (1) AL FIXTURE TO BTA ADAPTOR"** section. Follow for each fixture.

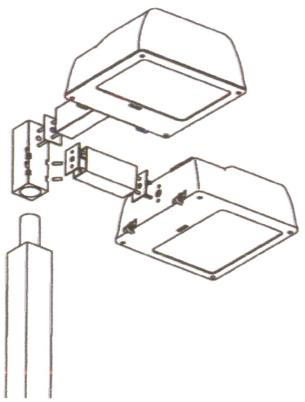

MOUNTING (2) AL FIXTURES AT 180° TO BTA ADAPTOR

Fixed Arm mounting to BTA180 for mounting 2 fixtures at 180 degrees as shown below.

See steps 1-6 in **"MOUNTING (1) AL FIXTURE TO BTA ADAPTOR"** section. Follow for each fixture.

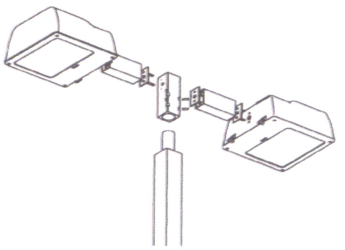

MOUNTING (3) AL FIXTURES TO BTA ADAPTOR

Fixed Arm mounting to BTA3 for mounting 3 fixtures as shown below.

See steps 1-6 in **"MOUNTING (1) AL FIXTURE TO BTA ADAPTOR"** section. Follow for each fixture.

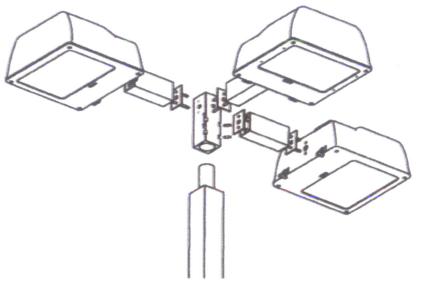

MOUNTING (4) AL FIXTURES TO BTA ADAPTOR

Fixed Arm mounting to BTA4 for mounting 4 fixtures as shown below.

See steps 1-6 in **"MOUNTING (1) AL FIXTURE TO BTA ADAPTOR"** section. Follow for each fixture.

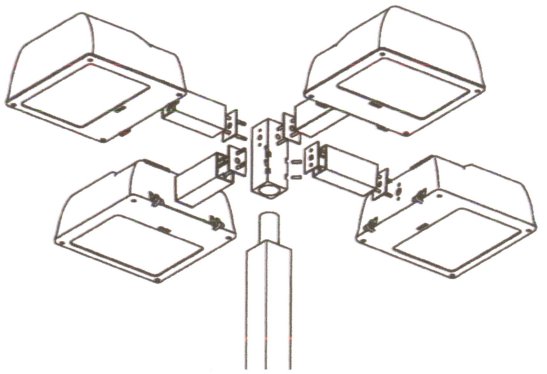

AL™ AREA LIGHT INSTALLATION INSTRUCTIONS

MOUNTING (1) AL FIXTURE DIRECTLY TO POLE

Fixed Arm mounting directly to 4" or larger square steel pole. Note **Arm Orientation** detail on first page.

1. Loosen (4) door screws, open fixture. Remove ballast cover.
2. Insert **Threaded Rods** into the pole and thread into the **Bolster Plate**.
3. Feed wires from fixture through **Gasket**, **Arm** and 2nd **Gasket** and into pole. Make connections and knot wires as a strain relief. Replace pole cap.
4. Line up extrusion slots with the **Threaded Rods** and slide **Arm** and fixture on **Threaded Rods**.
5. Place flat washer, lock washer and nut on the **Threaded Rods** inside the fixture and tighten securely.

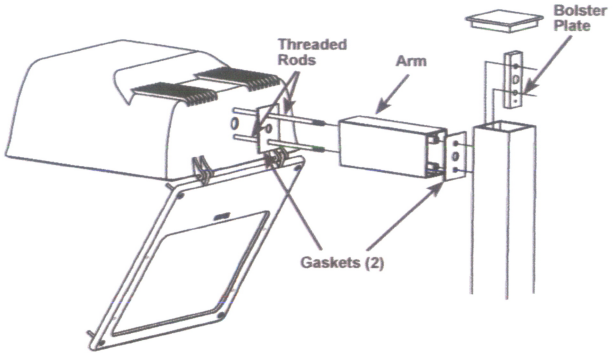

MOUNTING (2) AL FIXTURES AT 90° DIRECTLY TO POLE

Fixed Arm direct pole mounting of 2 fixtures at 90 degrees as shown below.

See steps 1-5 in "**MOUNTING (1) AL FIXTURE DIRECTLY TO POLE**" section. Follow for each fixture

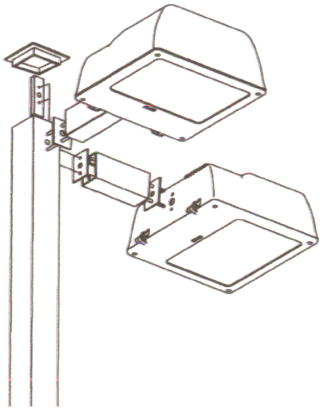

MOUNTING (2) AL FIXTURES AT 180° DIRECTLY TO POLE

Fixed Arm direct pole mounting of 2 fixtures at 180 degrees as shown below.

See steps 1-5 in "**MOUNTING (1) AL FIXTURE DIRECTLY TO POLE**" section. Follow for each fixture

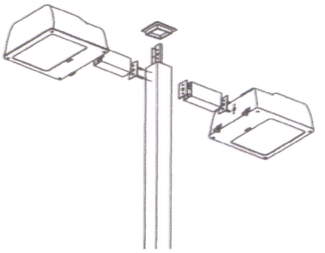

MOUNTING (3) AL FIXTURES DIRECTLY TO POLE

Fixed Arm direct pole mounting of 3 fixtures.

See steps 1-5 in "**MOUNTING (1) AL FIXTURE DIRECTLY TO POLE**" section. Follow for each fixture

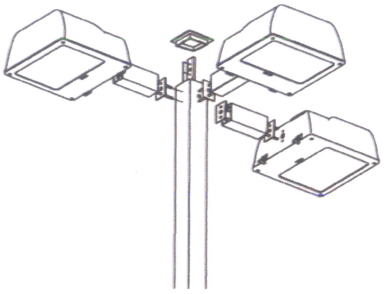

MOUNTING (4) AL FIXTURES DIRECTLY TO POLE

Fixed Arm direct pole mounting of 4 fixtures.

See steps 1-5 in "**MOUNTING (1) AL FIXTURE DIRECTLY TO POLE**" section. Follow for each fixture

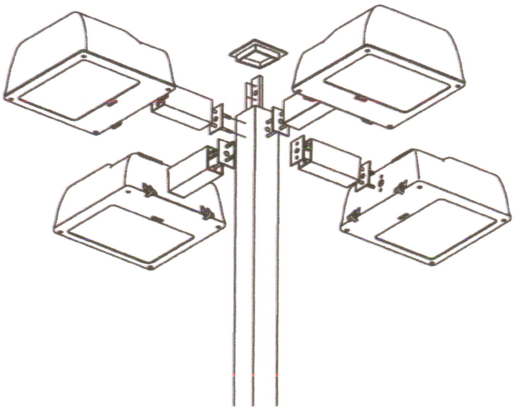

AL™ AREA LIGHT INSTALLATION INSTRUCTIONS

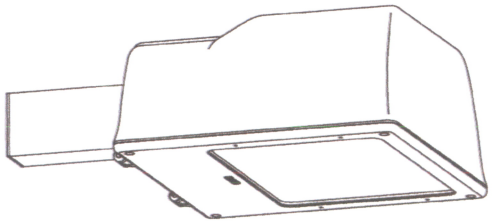

Thank you for buying RAB lighting fixtures. Our aim is to design the best quality products to get the job done right. We'd like to hear your comments. Call the Marketing Department at 888-RAB-1000, or email: marketing@rabweb.com

IMPORTANT

READ CAREFULLY BEFORE INSTALLING FIXTURE. RETAIN THESE INSTRUCTIONS FOR FUTURE REFERENCE.
RAB fixtures must be wired in accordance with the National Electrical Code and all applicable local codes. Proper grounding is required for safety. This product must be installed in accordance with the applicable installation code by a person familiar with the construction and operation of the product and the hazards involved.

WARNING: Make certain power is OFF before installing or maintaining fixture.

FIXED ARM

For full cutoff, mount arm oriented as shown below.

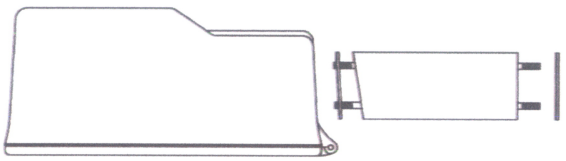

UP TILT FIXED ARM

For 6 degree up tilt, mount arm oriented as shown below.

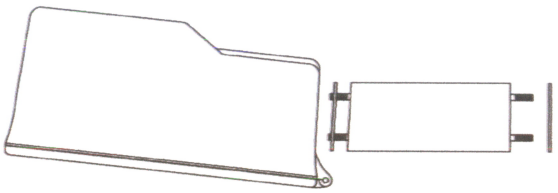

POLE DRILLING DETAIL

For mounting to a pole not drilled at RAB.

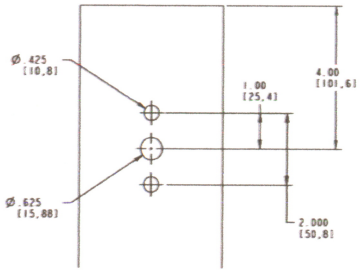

MOUNTING WITH SLIPFITTER

1. The slipfitter fits a 2 3/8" O.D. tenon. Place the slipfitter over the tenon and secure with the **(2) Set Screws** on the side of the slipfitter.
2. To adjust the angle of the fixture:
   a. Remove (2) **Cover Plate Screws** and the **Round Cover Plate**.
   b. Hold the top of fixture, loosen the **Locking Bolt** and swivel the fixture.
   c. Tighten the **Locking Bolt** and re-attach the **Round Cover Plate**.

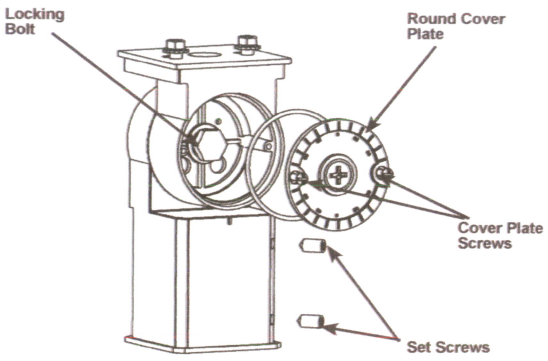

c UL US LISTED
SUITABLE FOR WET LOCATIONS

Note: These instructions do not cover all details or variations in equipment nor do they provide for every possible situation during installation, operation or maintenance.

RAB fixture designs are protected under U.S. and International Intellectual Property laws. Patent pending.

AL™ AREA LIGHT INSTALLATION INSTRUCTIONS

LAMP INSTALLATION

CAUTION: Prior to installing, check that the lamp is the correct ANSI type and wattage. Observe lamp manufacturer's recommendations on lamp operation, ballast type and burning positions.

1. Disconnect power. Make sure fixture and lamp are cool enough to touch.
2. Loosen (4) screws from the door of the fixture. Screws will remain captive to door. Open and swing door down on hinges.
3. Fully screw the lamp into the socket.
4. Before closing door, make sure door gasket is properly seated all around the door.
5. Check that all mounting bolts are tight.
6. Close door. Tighten screws.

WIRING

All units are factory wired for 277V, except for units with a requested 120V Photocell("/PC"). If voltages other than 277V are required, remove ballast cover and rewire for the appropriate voltage.

1. Connect the black fixture lead to the (+) LINE supply lead.
2. Connect the white fixture lead to the (-) COMMON supply lead.
3. Connect the Ground wire from fixture to supply ground.
4. All unused leads must be capped and insulated.

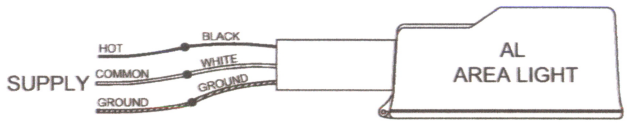

CLEANING & MAINTENANCE

CAUTION: Be sure fixture temperature is cool enough to touch. Do not clean or maintain while fixture is energized.

1. Clean glass lens with non-abrasive glass cleaning solution.
2. As lamps age, light output diminishes. Mass re-lamping at regular intervals ensures full light output at the highest efficiency.

REPLACEMENT LAMPS AND BALLASTS

Wattage	RAB Lamp Catalog#	ANSI Code	RAB Ballast Catalog#
High Pressure Sodium			
250	LHPS250	S50	BHPSH250QT
400	LHPS400	S51	BHPSH400QT
Metal Halide			
175	LMH175MOG	M57	BMHH175QT
200PS	LMH200PS	M136	BMHH200PSQ
250	LMH250	M58	BMHH250QT
250PS	LMH250PS	M153	BMHH250PSQ
320PS	LMH320PS	M154	BMHH320PSQ
350PS	LMH350PS	M131	BMHH350PSQ
400	LMH400Z	M59	BMHH400QT
400PS	LMH400PS	M155	BMHH400PSQ

480V Ballasts are available, consult factory.

TROUBLESHOOTING

1. Is the proper lamp installed? Check the wattage and ANSI code on the fixture label against markings on the lamp. Refer to Replacement Lamp table above for verification.
2. Make sure the lamp is not defective. Try a lamp known to be in operating condition.
3. Check that the line voltage at fixture is correct. Refer to wiring directions.
4. Is there voltage at the lamp socket? If there is no voltage, check all connections.
5. Is the fixture grounded properly?
6. Is the photocell functioning properly (if used)?

ACCESSORIES AND REPLACEMENT PARTS

Chrome Wire Guard:	GDMEG
House Side Sheild:	MEGH9
Bolster Plate:	ALBP
Pole Top Tenon Adaptors:	BTA4

RAB LIGHTING
©1985-2008 RAB LIGHTING Inc.
Northvale, New Jersey 07647 USA

Easy Installation & Product Help

Tech Help Line	*Toll Free Fax*	*e-mail*	*Lightinglayouts.com*	*rabweb.com*
Call our experts	Send a fax to RAB	Answered promptly	Easy lighting layouts	Visit our website
888 RAB-1000	888 RAB-1232	sales@rabweb.com	in minutes	for product info

RAB LIGHTING

ALH400PSQ

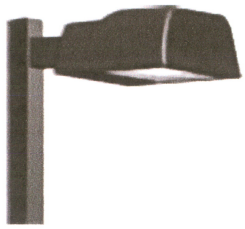

JOB NAME: _____

DATE: _____

TYPE: _____

DESCRIPTION

Type II distribution Area Light with pole top fixed arm mount. Fixed mounting at 90° to pole. Drilling 2" on center. Lamp supplied.

SPECIFICATIONS

Finish:
Chip and fade resistant bronze polyster powder coat finish.

Housing:
One-piece precision die cast aluminum housing and door held captive when opened. Removable hinge pins for door removal.

Lens Gasket:
High temperature extruded silicone set in die cast retaining groove. Remains in place during relamping.

Lens:
Thermal, tempered shock resistant glass, 5/32" thick.

Mounting Arm:
Mounts with two 5/16 -18 threaded rods at 2" on center.

Patents:
Sensor and fixture designs are protected under U.S. and International Intellectual Property Laws

Reflector:
Hydroformed Type II reflector.

Socket:
Porcelain socket pulse rated 4kv, 1500 watts and 600 volts, reinforced with cat's eyes for added durability. Silicone and fiberglass #14 gauge socket leads rated for 200° C. Plated screw shell designed to resist corrosion with spring loaded center contact.

UL Listing:
Suitable for wet locations. Suitable for mounting within 4' of the ground.

EISA 2007 Compliant
This product complies with the new law for metal halide ballast efficiency. This law goes into effect January 1st, 2008. Pulse Start offers Longer Lamp Life, Faster Startup and Faster Restrike.

EPA:
1

Color:
Bronze

Weight:
34.61

ORDERING INFORMATION

Metal Halide
Lamp supplied with fixture

Total Watts	Lamp Type	Lamp Base	Ballast	Starting Amps/ Operating Amps 120V	208V	240V	277V	Input Watts	LAMP ANSI	Initial Lumens	Lamp Hours
400	ED28	Mogul	CWA HPF QT	3.5/4.0	2.0/2.3	1.8/2.0	1.5/1.8	450	M135	40000	20000

Factory Installed Options
Add suffix to Catalog Number

Swivel Photocontrol (/PCS)
Single fusing for 120 and 277 volt (/F)
Double fusing for 208 and 240 volt (/FF)
Button Photocontrol (/PC)
480 volt ballast (consult factory) (/480)

Note: Specifications may change without notice

RAB Lighting, Inc. • 170 Ludlow Ave• Northvale, NJ 07647 • Tel: 888 RAB-1000 • Fax: 888 RAB-1232 • www.rabweb.com

© 2010 RAB Lighting, Inc.

JOB NAME: _____

DATE: _____

TYPE: _____

PS4-07-25D2

DESCRIPTION

Square steel poles drilled for 2 Area Lights at 180°. Designed for ground mouting. Poles are stocked nationwide for quick shipment. Protective packaging ensures poles arrive at the job site good as new.

SPECIFICATIONS

Base Plates:
36,000 p.s.i. minimum yield

Color:
Bronze

Hand Holes:
Reinforced with grounding lug and removable cover.

Shaft:
46,000 p.s.i. minimum yield

Shipping Protection:
All poles are shipped in individual corrugated cartons to prevent finish damage.

Anchor Bolt Templates:
WARNING: Template must be printed on 11" x 17" sheet for actual size. CHECK SCALE BEFORE USING. Templates shipped with anchor bolts and available

Anchor Bolt:
3/4" x 20" x 3" Galvanized anchor bolts and galvanized hardware and anchor bolt template. All bolts have a 3" hook

Base Dimension:
10"

Bolt Circle:
9"

Gauge:
7

Hand Hole Dimensions:
3" x 6"

Height:
25 FT

MaxEPA's/Max Weights:
70MPH: 10.7 ft²/245 lb
80MPH: 7.2 ft²/165 lb
90MPH: 4.7 ft²/110 lb
100MPH: 2.9 ft²/65 lb
110MPH: 1.4 ft² /35 lb
120MPH: 0.3 ft²/10 lb

Pre-Shipped Anchor Bolts:
Bolts can be pre-shipped upon request for additional freight charge

Shaft Size:
4"

Terms of Sale:
Pole Terms of Sale is available

Wall Thickness:
3/16"

Weight:
240

DIMENSIONS

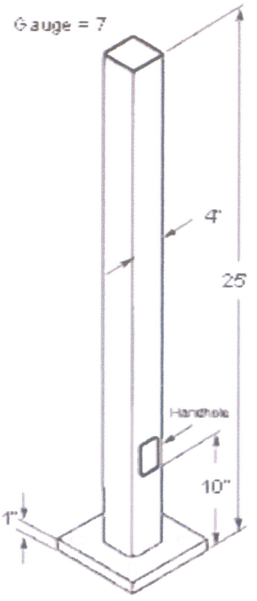

Note: Specifications may change without notice

RAB Lighting, Inc. • 170 Ludlow Ave• Northvale, NJ 07647 • Tel: 888 RAB-1000 • Fax: 888 RAB-1232 • www.rabweb.com

© 2010 RAB Lighting, Inc.

LITHONIA LIGHTING®

Catalog Number	
Notes	Type

FEATURES & SPECIFICATIONS

INTENDED USE

For entrances, stairwells, corridors, other pedestrian areas.

CONSTRUCTION

Cast aluminum backplate on which electrical components are mounted for maximum heat-dissipation. Gasketing between backplate and front cover prevents the entry of water and contaminants. External hardware includes phillips head and tamper-proof hex-head fasteners.

FINISH

Dark bronze (DDB) or white (DWH) front cover available for all wattages.

OPTICAL SYSTEM

Front cover/refractor is injection-molded, one-piece, UV-stabilized polycarbonate. Optical system is sealed and gasketed to inhibit entrance of outside contaminants.

ELECTRICAL SYSTEM

35W-70W HPS and 50W MH use 120V normal power factor.

Porcelain, medium-base socket with copper alloy nickel-plated screw shell and center contact. UL listed 660W, 600V, 4KV pulse rated. Medium-base lamp included with the fixture.

INSTALLATION

Units are for wall mounting and include two 3/4" knockouts for routing electrical conduit.

LISTING

UL listed for wet locations. Listed and labeled to comply with Canadian Standards.

Small Polycarbonate Wall Pack

TWS

METAL HALIDE
50W
HIGH PRESSURE SODIUM
35W, 50W, 70W
8' to 12' Mounting

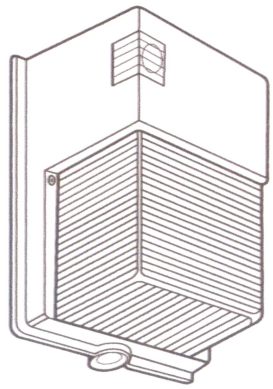

Specifications

Height: 11" (27.9cm)
Width: 6-1/2" (16.5cm)
Depth: 5-1/4" (13.3cm)
Weight: 4.9 lbs./2.2 kgs

ORDERING INFORMATION

For shortest lead times, configure product using **standard options (shown in bold).**
Example: TWS 50M 120 PE LPI

TWS		120	
Series	Wattage/lamp	Voltage	Options
TWS	Metal halide **50M** High pressure sodium 35S 50S **70S**	**120**	Shipped installed in fixture **PE Photoelectric cell as standard** **LPI Lamp included as standard** Architectural colors (optional) (blank) **Dark bronze** DWH White

Accessories

Order as separate catalog numbers
RK1 PEB1 Photocell kit (120V only)
TWSWG Wireguard

TWS High Pressure Sodium Wall Pack

TWS 35S TEST NO: LTL12508

ISOILLUMINANCE PLOT (Footcandle)

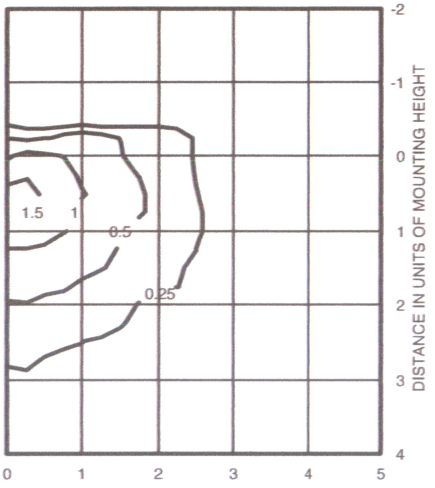

Luminaire Efficiency: 65.6%
35W high pressure sodium lamp
Footcandle values based on 8'
mounting height, 2250 rated lumens.

TWS 50S TEST NO: LTL12306

ISOILLUMINANCE PLOT (Footcandle)

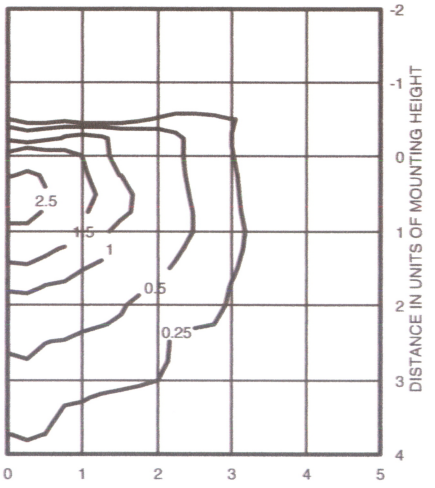

Luminaire Efficiency: 65.6%
50W high pressure sodium lamp
Footcandle values based on 8'
mounting height, 4000 rated lumens

TWS 70S TEST NO: LTL12509

ISOILLUMINANCE PLOT (Footcandle)

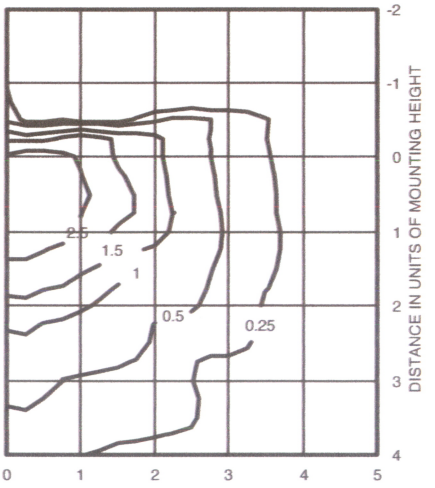

Luminaire Efficiency: 65.6%
70W high pressure sodium lamp
Footcandle values based on 8'
mounting height, 6300 rated lumens.

Mounting Height Correction Factor
(Multiply the fc level by the correction factor)

10 ft. = .64
12 ft. = .44

LITHONIA LIGHTING®
An AcuityBrands Company

Sheet #: TWS-M-S

©2004-2010 Acuity Brands Lighting, Inc. All rights reserved. Rev. 3/1/10

Lithonia Lighting
Outdoor Lighting
One Lithonia Way, Conyers, GA 30012
Phone: 770-922-9000 Fax: 770-918-1209
www.lithonia.com